AEROSPACE STRUCTURAL DYNAMICS

IV B. Tech VII semester (Autonomous IARE R-16)

BY

Dr. Sudhir Sastry .Y.B
Professor, AE
Mr. T Mahesh Kumar
Assistant Professor, AE

DEPARTMENT OF AERONAUTICAL ENGINEERING
INSTITUTE OF AERONAUTICAL ENGINEERING
(Autonomous)
DUNDIGAL, HYDERABAD - 500 043

Course Outcomes

CO's	Course outcomes
CO1	Understand the concept of vibrations, equation of motion, response to harmonic excitation, impulsive excitation, step excitation, periodic excitation (Fourier series), Fourier transform), Laplace transform (Transfer Function).
CO2	Remember and describe the concept of Eigen value problem, damping effect; Modeling of continuous systems as multi-degree-of-freedom systems, equations of motion of undamped systems in matrix form, unrestrained systems, free and forced vibration of undamped systems; using modal analysis, forced vibration of viscously damped systems
CO3	Determine and apply the concept of nonlinear vibrations physical properties of nonlinear systems single-degree-of-freedom and multi-degree-of-freedom nonlinear systems. Random vibrations;, single-degree-of-freedom response, response to a white noise.
CO4	Describe about transverse vibration of a string or cable, longitudinal vibration of a bar or rod, torsional vibration of shaft or rod, lateral vibration of beams, the Rayleigh-Ritz method.
CO5	Understand the concept of Collar's aero elastic triangle, static aero elasticity aero elastic problems at transonic speeds, active flutter suppression. Effect of aero elasticity in flight vehicle design.

UNIT - I
SINGLE-DEGREE-OF-FREEDOM LINEAR SYSTEMS

Introduction to theory of vibration, equation of motion, free vibration, response to harmonic excitation, response to an impulsive excitation, response to a step excitation, response to periodic excitation (Fourier series), response to a periodic excitation (Fourier transform), Laplace transform (Transfer Function).

UNIT - I

CLOs	Course Learning Outcome
CLO1	Apply principles of engineering, basic science, and mathematics (including multivariate calculus and differential equations) to model, analyze, design, and realize physical systems, components or processes, and work professionally in mechanical systems areas.
CLO2	Become proficient in the modeling and analysis of one degree of freedom systems - free vibrations, transient and steady-state forced vibrations, viscous and hysteric damping.
CLO3	Understanding the response to periodic excitation (Fourier series , Fourier transform)
CLO4	Using Laplace transforms and the Convolution integral formulations to understand shock spectrum and system response for impact loads.

Introduction to theory of vibration

- ✓ Defined as oscillatory motion of bodies in response to disturbance.
- ✓ Oscillations occur due to the presence of a restoring force
- ✓ Vibrations are everywhere:
  - Human body: eardrums, vocal cords, walking and running
  - Vehicles: residual imbalance of engines, locomotive wheels
  - Rotating machinery: Turbines, pumps, fans, reciprocating machines
  - Musical instruments

Introduction to theory of vibration

- ✓ Excessive vibrations can have detrimental effects:
  - Noise
  - Loosening of fasteners
  - Tool chatter
  - Fatigue failure
  - Discomfort
- ✓ When vibration frequency coincides with natural frequency, resonance occurs.

Basic Concepts of Vibration

Vibration: Any motion that repeats itself after an interval of time is called ***vibration or oscillation***.

The swinging of a pendulum and the motion of a plucked string are typical examples of vibration.

The theory of vibration deals with the study of oscillatory motions of bodies and the forces associated with them.

Basic Concepts of Vibration

Elementary Parts of Vibrating Systems: A vibratory system, in general, includes a means for storing potential energy (spring or elasticity), a means for storing kinetic energy (mass or inertia), and a means by which energy is gradually lost (damper).

The vibration of a system involves the transfer of its potential energy to kinetic energy and of kinetic energy to potential energy, alternately.

If the system is damped, some energy is dissipated in each cycle of vibration and must be replaced by an external source if a state of steady vibration is to be maintained.

Basic Concepts of Vibration

Example:

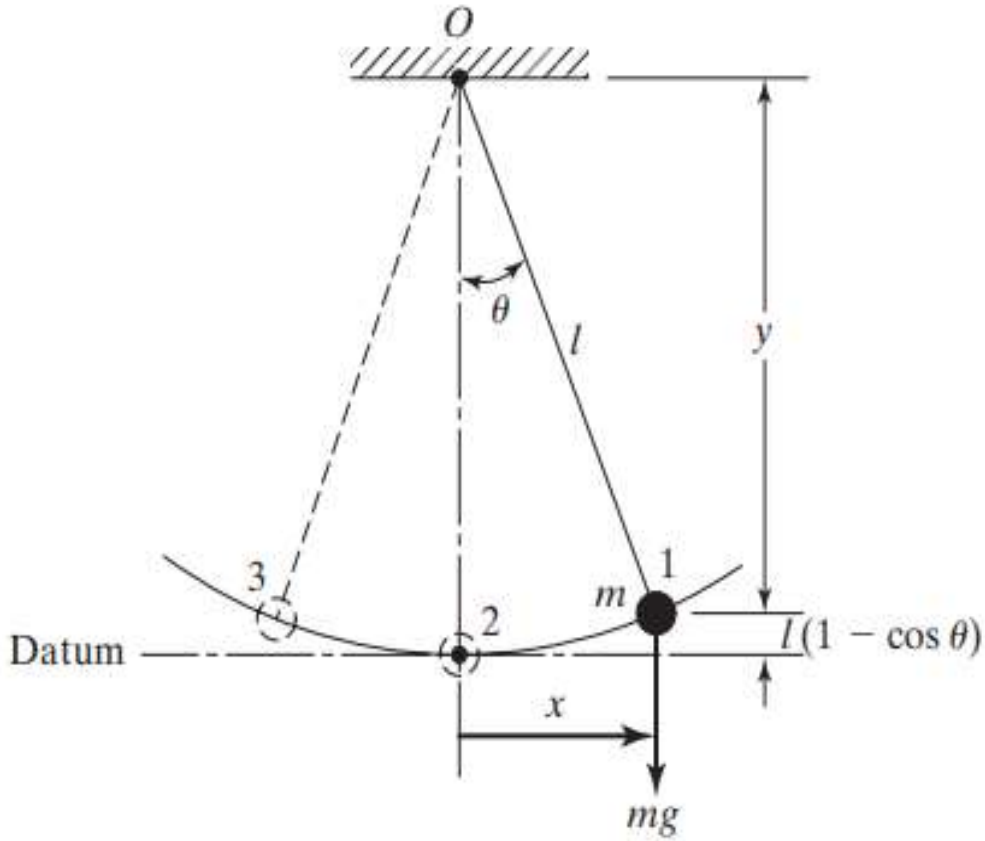

Fig. A simple pendulum.

Number of degrees of freedom

The minimum number of independent coordinates required to determine completely the positions of all parts of a system at any instant of time defines the number of degrees of freedom of the system.

Single-degree-of-freedom systems

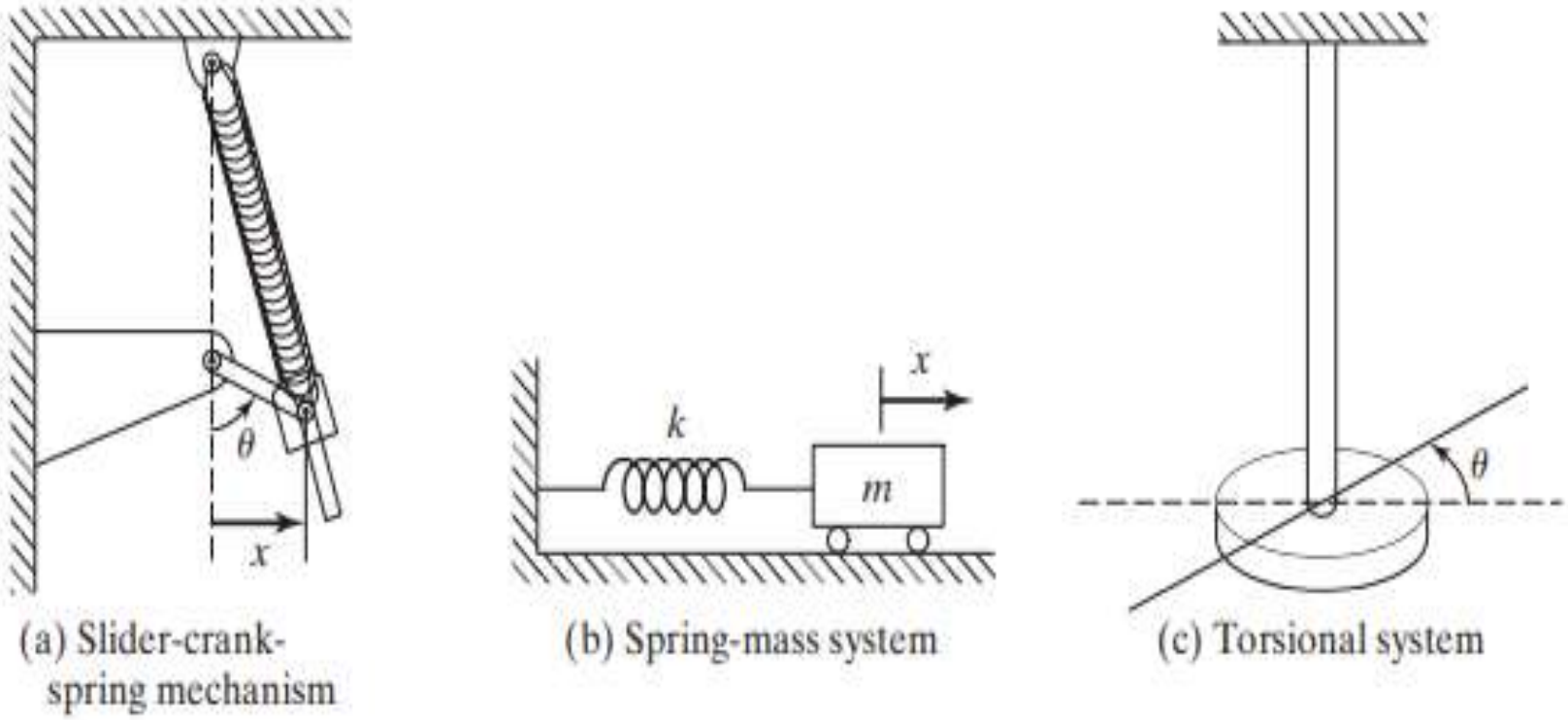

Fig. Single-degree-of-freedom systems.

Two-degree-of-freedom systems

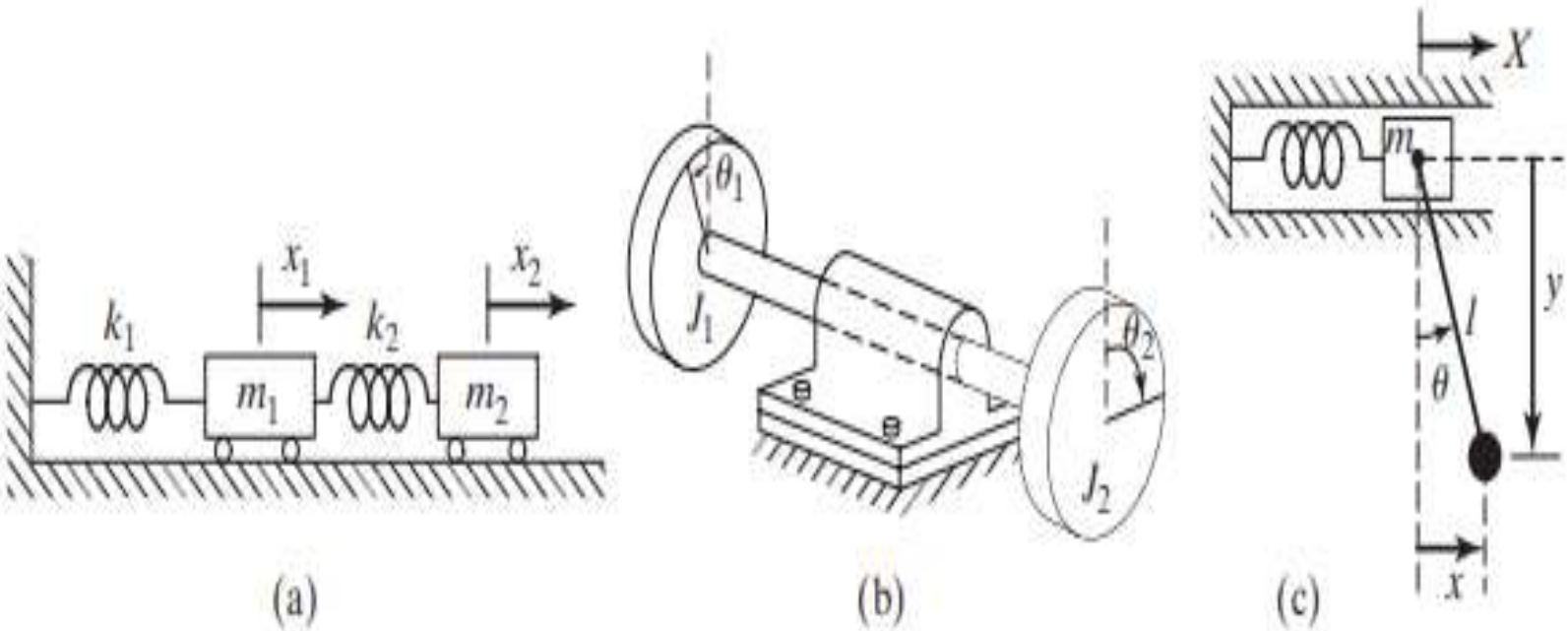

Fig. Two-degree-of-freedom systems.

Three degree-of-freedom systems

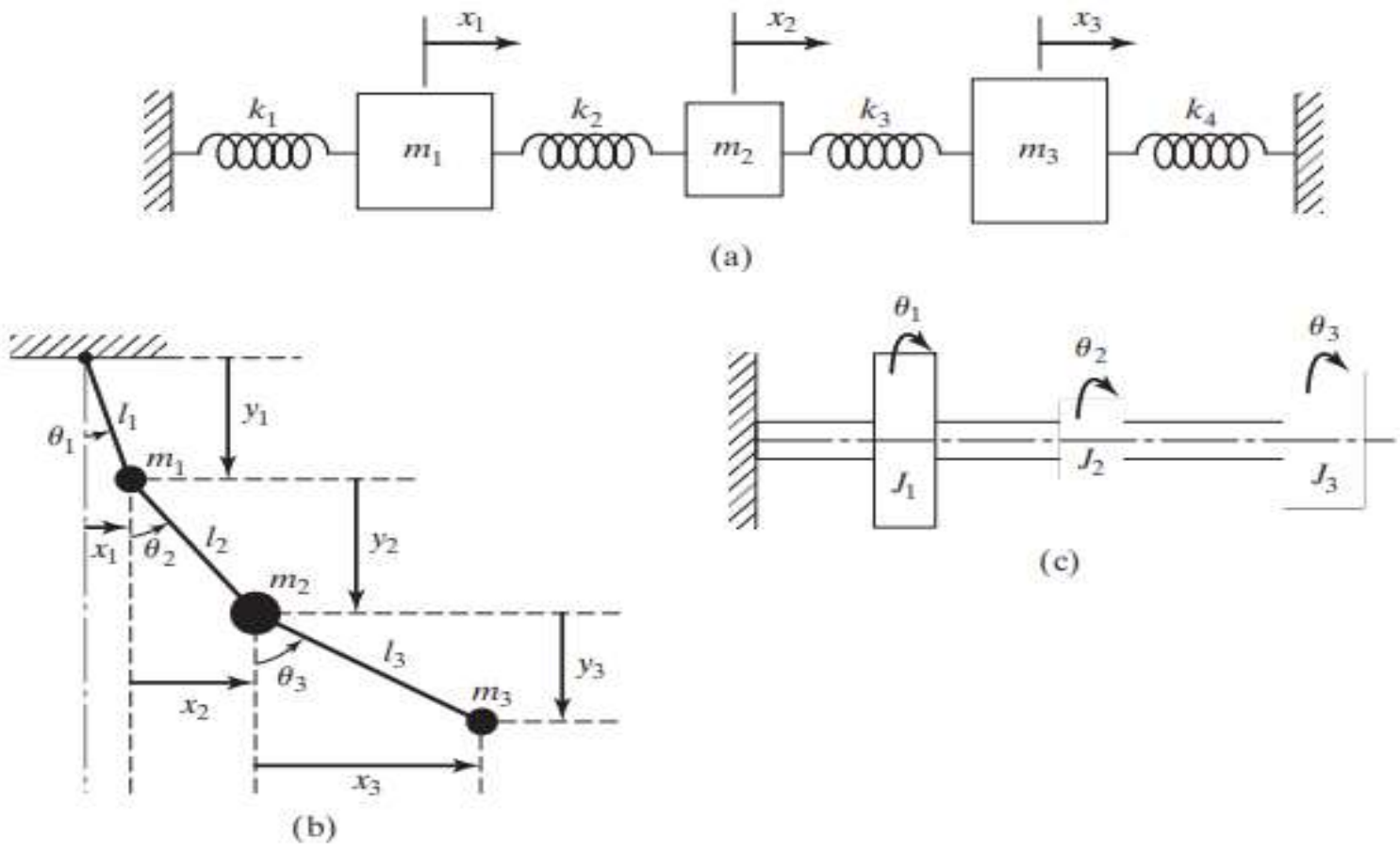

Fig. Three degree-of-freedom systems.

Infinite-number-of-degrees-of-freedom system

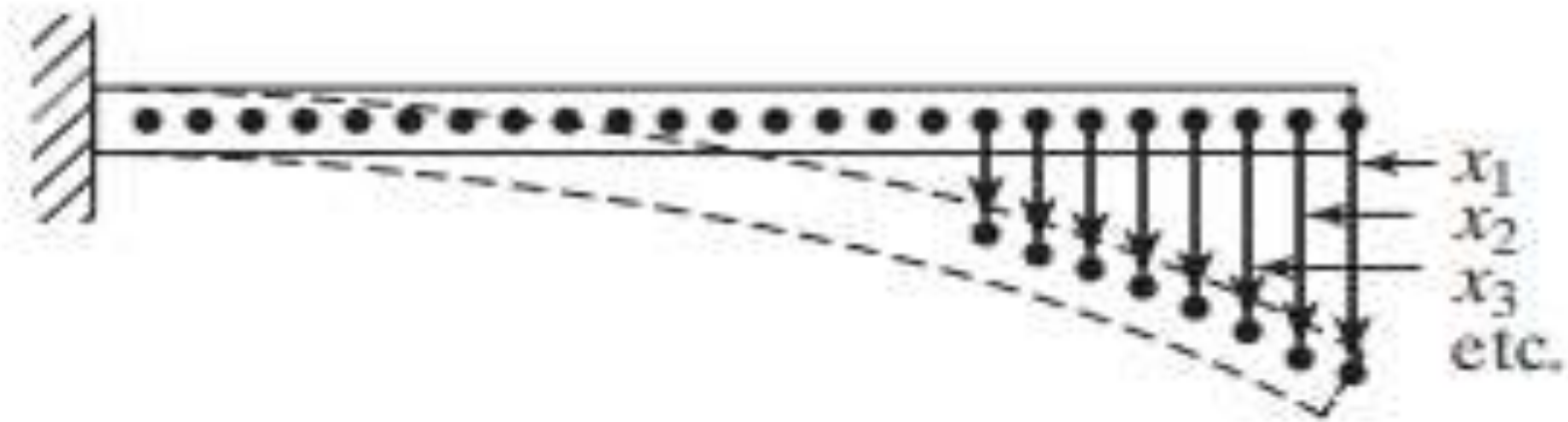

Fig. A cantilever beam (an infinite-number-of-degrees-of-freedom system).

Discrete and continuous systems

Systems with a finite number of degrees of freedom are called ***discrete or lumped*** parameter systems, and those with an infinite number of degrees of freedom are called ***continuous or distributed*** systems.

Classification Of Vibration

Vibration can be classified in several ways. Some of the important classifications are as follows.

1. **Free and Forced Vibration:**
2. **Undamped and Damped Vibration:**
3. **Linear and Nonlinear Vibration:**
4. **Deterministic and Random Vibration:**

Free and forced vibration

Free Vibration. If a system, after an initial disturbance, is left to vibrate on its own, the ensuing vibration is known as free vibration. No external force acts on the system.

The oscillation of a simple pendulum is an example of free vibration.

Forced Vibration. If a system is subjected to an external force (often, a repeating type of force), the resulting vibration is known as forced vibration.

Free and forced vibration

The oscillation that arises in machines such as diesel engines is an example of forced vibration.

If the frequency of the external force coincides with one of the natural frequencies of the system, a condition known as resonance occurs, and the system undergoes dangerously large oscillations.

Failures of such structures as buildings, bridges, turbines, and airplane wings have been associated with the occurrence of resonance.

Undamped and Damped Vibration

If no energy is lost or dissipated in friction or other resistance during oscillation, the vibration is known as undamped vibration.

If any energy is lost in this way, however, it is called damped vibration.

In many physical systems, the amount of damping is so small that it can be disregarded for most engineering purposes.

However, consideration of damping becomes extremely important in analyzing vibratory systems near resonance.

Linear and Nonlinear Vibration

If all the basic components of a vibratory system the spring, the mass, and the damper behave linearly, the resulting vibration is known as linear vibration.

If, however, any of the basic components behave nonlinearly, the vibration is called nonlinear vibration.

The differential equations that govern the behavior of linear and nonlinear vibratory systems are linear and nonlinear, respectively.

Linear and Nonlinear Vibration

If the vibration is linear, the principle of superposition holds, and the mathematical techniques of analysis are well developed.

For nonlinear vibration, the superposition principle is not valid, and techniques of analysis are less well known.

Since all vibratory systems tend to behave nonlinearly with increasing amplitude of oscillation, knowledge of nonlinear vibration is desirable in dealing with practical vibratory systems.

Deterministic and Random Vibration

If the value or magnitude of the excitation (force or motion) acting on a vibratory system is known at any given time, the excitation is called deterministic. The resulting vibration is known as deterministic vibration.

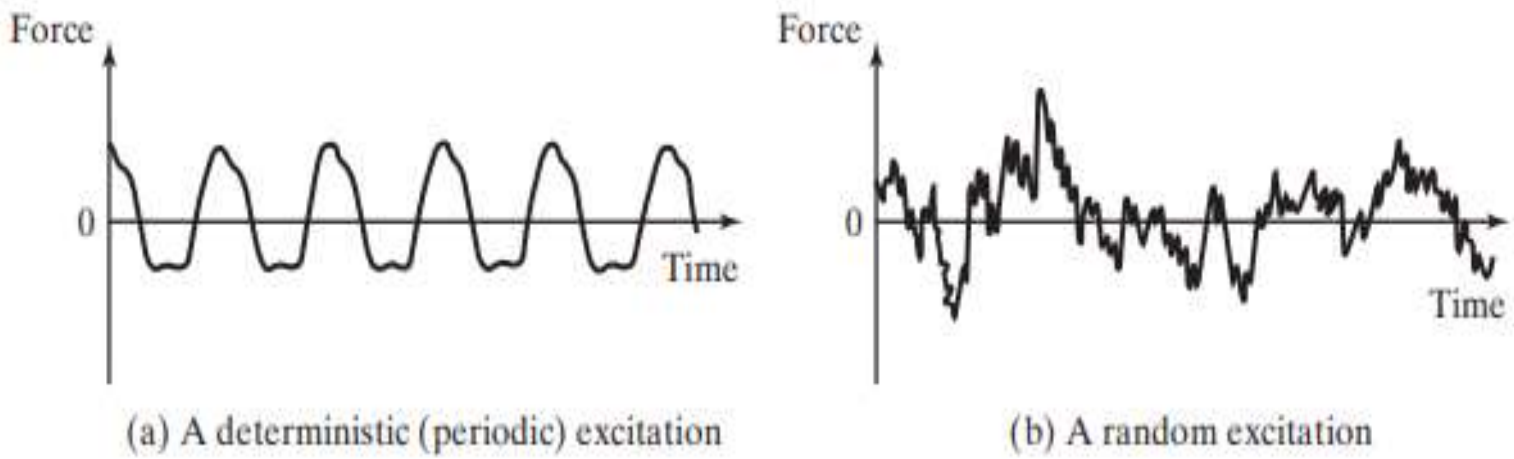

Fig. Deterministic and random excitations.

Vibration Analysis Procedure

A vibratory system is a dynamic one for which the variables such as the excitations (inputs) and responses (outputs) are time dependent.

The response of a vibrating system generally depends on the initial conditions as well as the external excitations.

Step 1: Mathematical Modeling.

Step 2: Derivation of Governing Equations.

Step 3: Solution of the Governing Equations.

Step 4: Interpretation of the Results.

Step 1: Mathematical Modeling

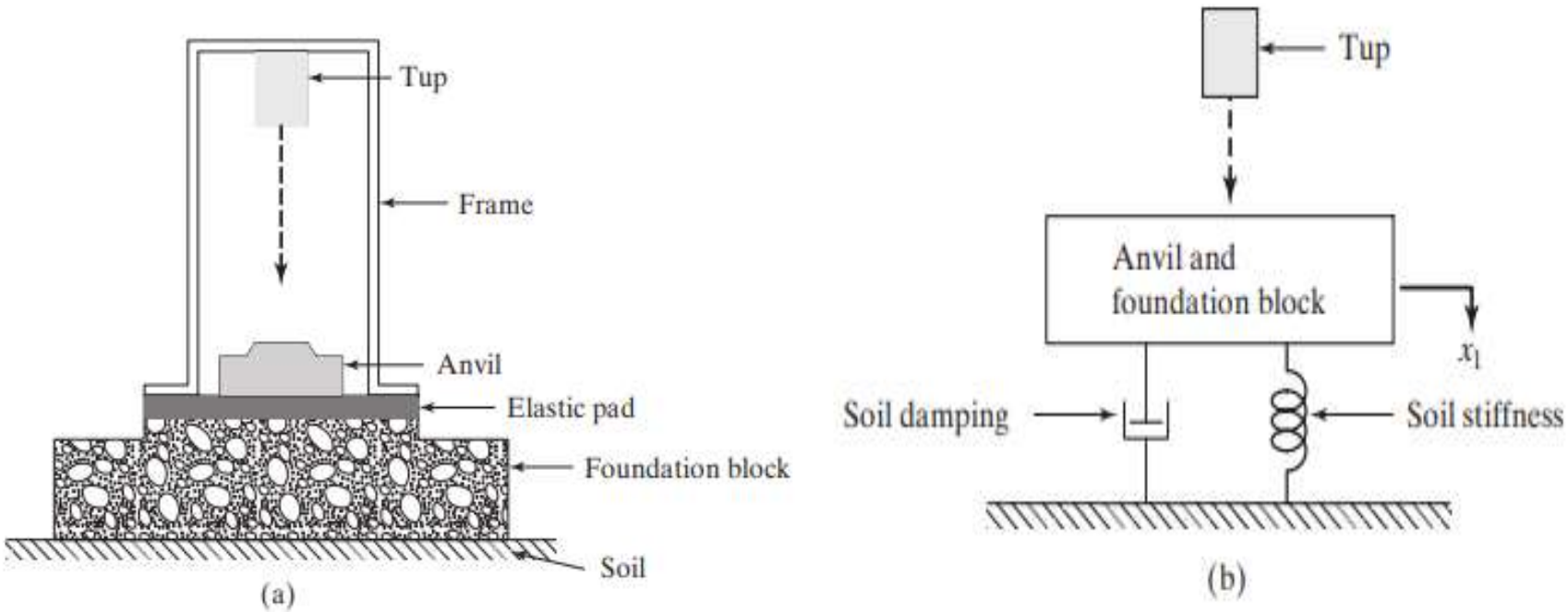

Fig. Modeling of a forging hammer.

Mathematical Modeling

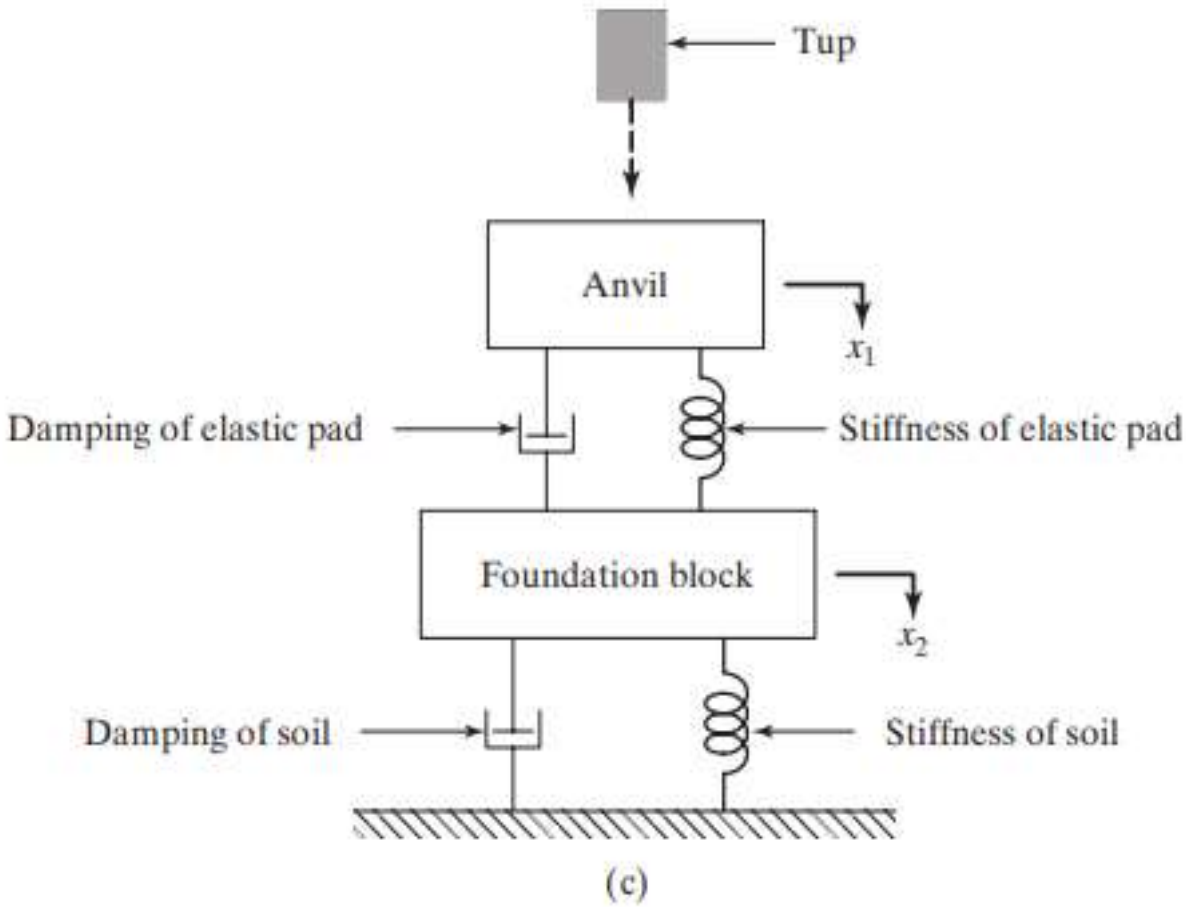

Fig. Modeling of a forging hammer.

EXAMPLE 1. Mathematical Model of a Motorcycle

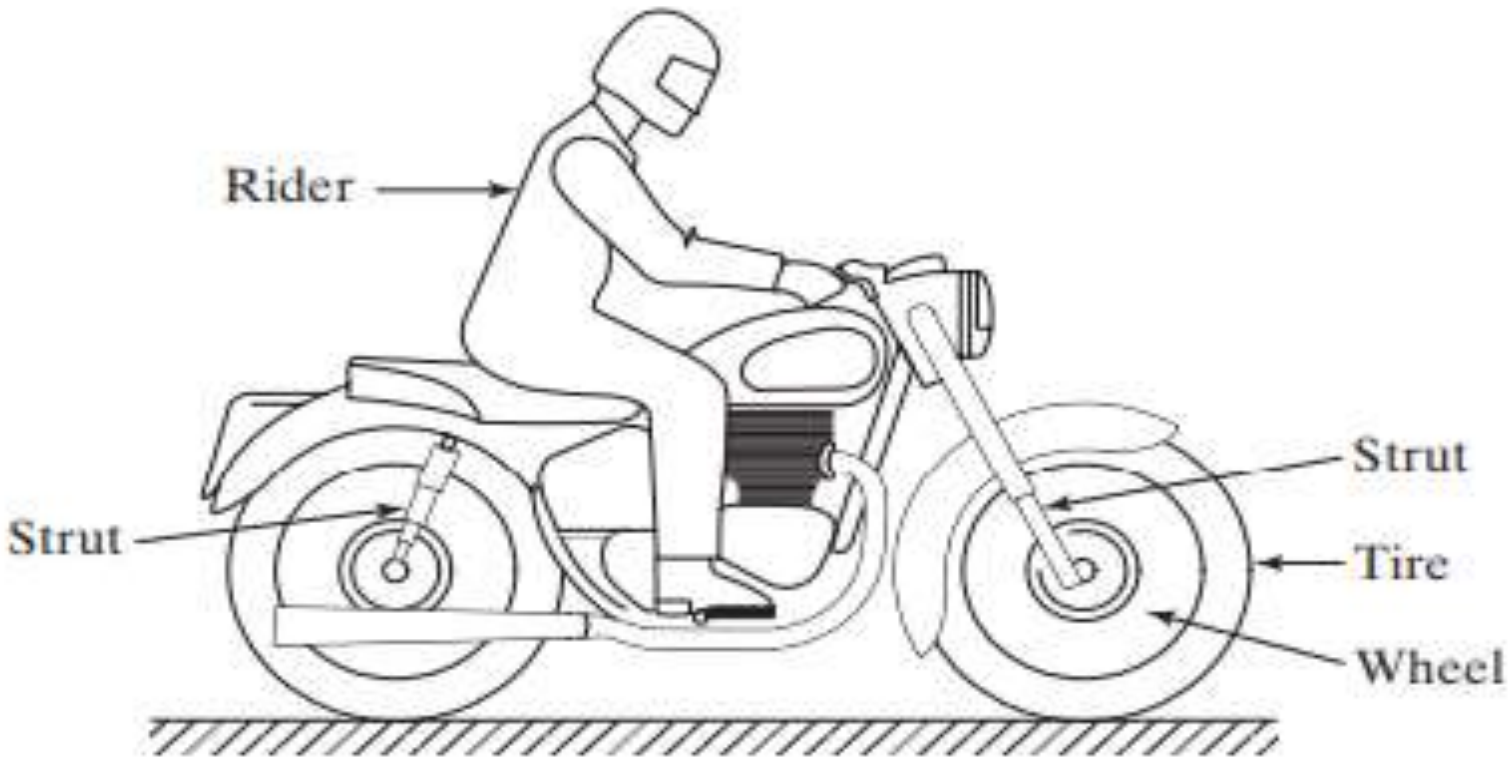

(a)

Mathematical Model of a Motorcycle

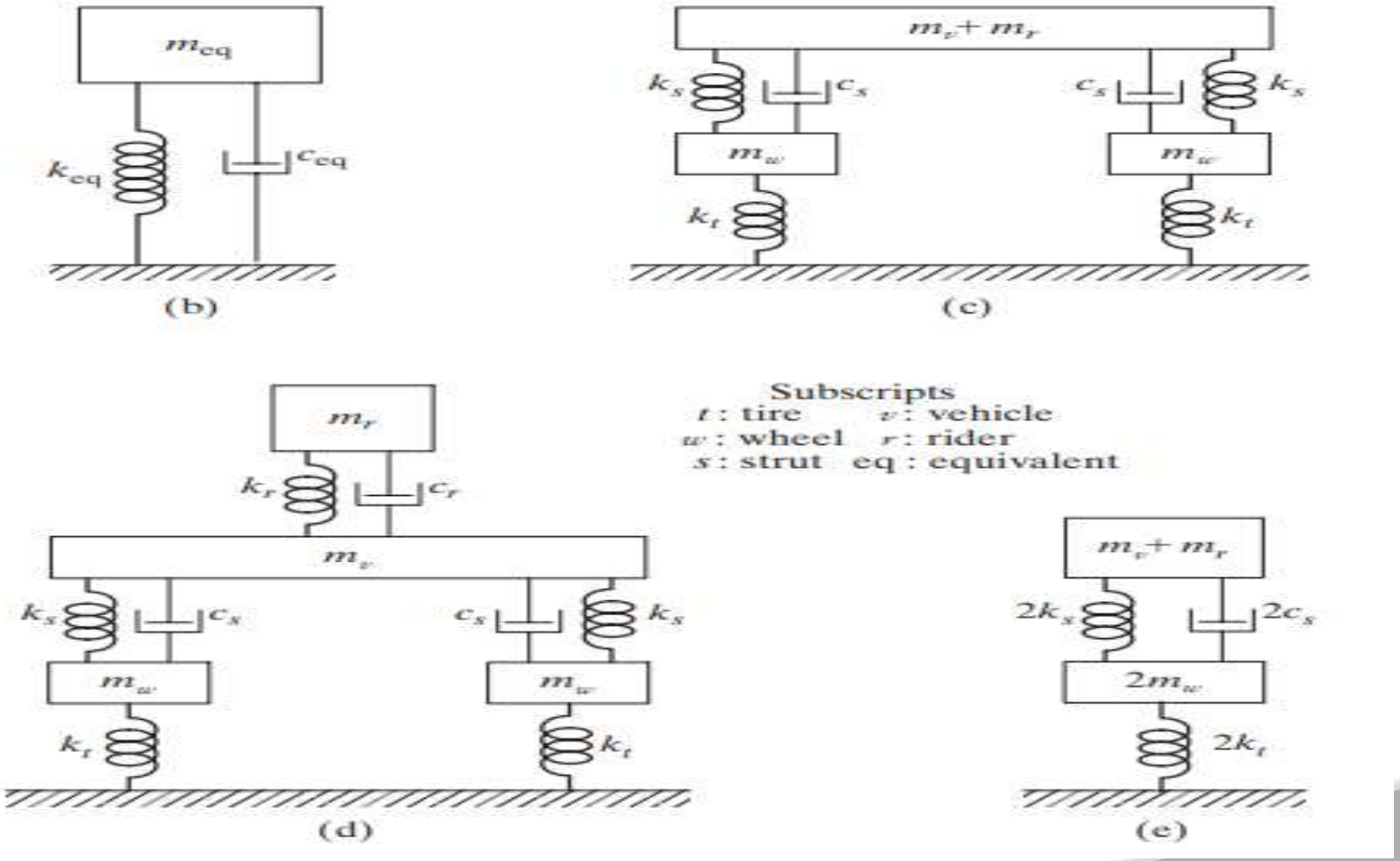

Fig. Motorcycle with a rider a physical system and mathematical model.

Equation of Motion

Consider the single-degree-of-freedom mechanical system shown in Fig. The system consists of a concentrated mass m (kg), a spring with a spring constant k (N-m), and a dashpot having a viscous damping coefficient c (N-s/m).

The external applied load is F(t)(N) and the displacement x(t)(m) is measured from the position of equilibrium.

The potential energy stored at any instance of time t, measured from the position of equilibrium, can be written as

Equation of Motion

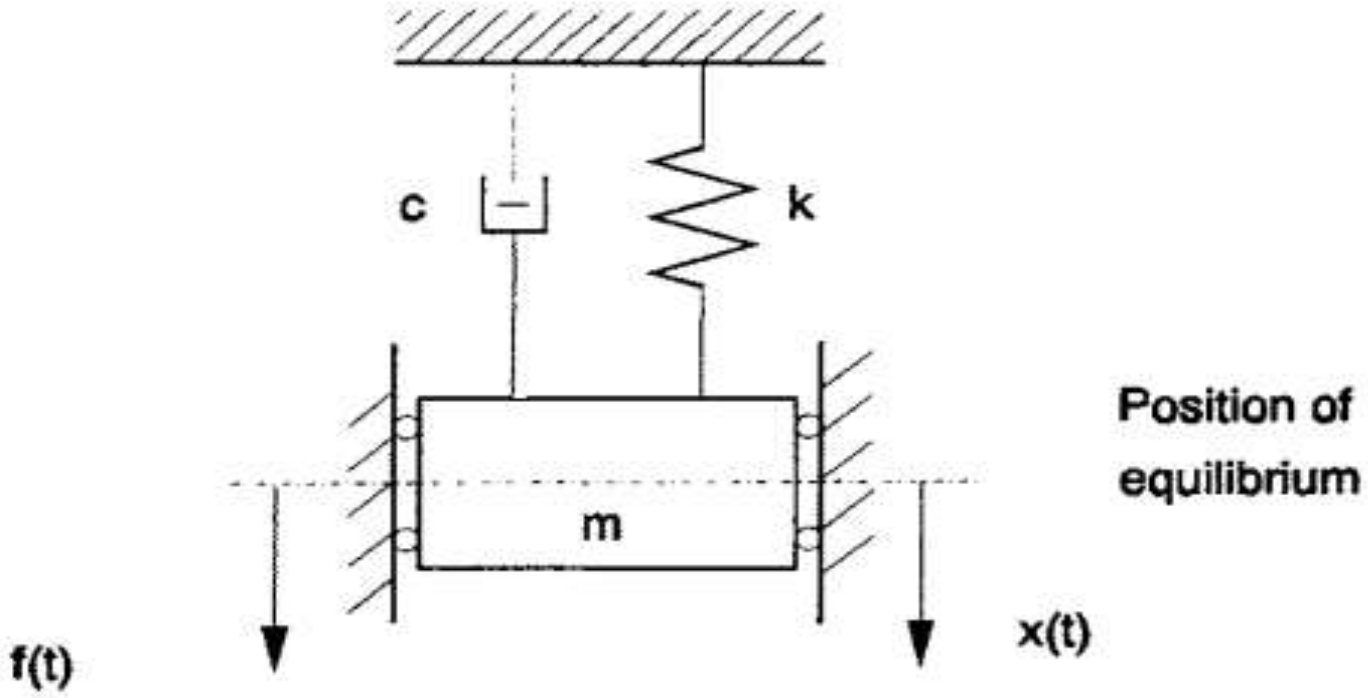

Fig. Single-degree-of-freedom mechanical systems.

Equation of Motion

$$U = \int_0^x kx\,\mathrm{d}x = \frac{1}{2}kx^2$$

The kinetic energy of the mass m reads

$$D = \tfrac{1}{2}cx'^2$$

$$T = \tfrac{1}{2}mx'^2$$

Applying Lagrange's equation of motion,

$$[\mathrm{d}L/\mathrm{d}x']' - \mathrm{d}L/\mathrm{d}x + \mathrm{d}D/\mathrm{d}x' = Q$$

Where L = T — U and Q is the generalized force corresponding to the degree of freedom x, we obtain

$$mx'' + cx' + kx = F(t)$$

Free Vibrations

We consider first the response of the system because of initial conditions x(0) and x'(0) in free vibration, i.e., F(t) = 0. The equation of motion reads

$$mx'' + cx' + kx = 0$$

is a homogeneous differential equation that admits solutions in the form

$$x = x_0 e^{pt}$$

Where x_0 is an arbitrary constant to be determined from the initial conditions and p is a parameter that depends on the system properties. Substituting the solution into the equation of motion, we obtain the system characteristic equation

$$p^2 + (c/m)p + (k/m) = 0$$

and has solutions p1 and P2, given by

$$p = -(c/2m) \pm [(c/2m)^2 - (k/m)]^{\frac{1}{2}}$$

Free Vibrations

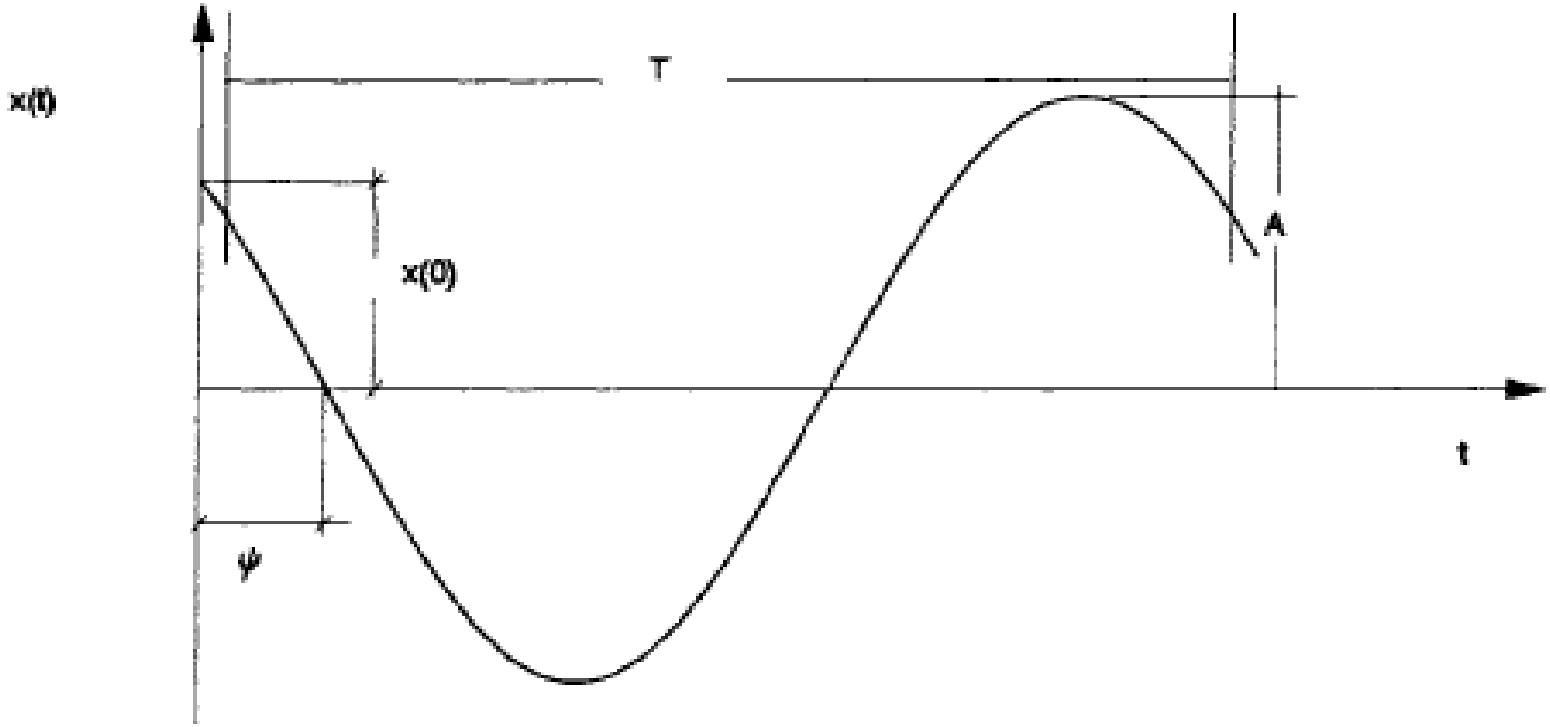

Free vibration of an undamped single-degree-of-freedom system: $T = 2\pi/\omega_n = 1/f_n$, $A = [x^2(0) + x'^2(0)/\omega_n^2]^{1/2}$, and $\psi = \phi/\omega_n = \{tg^{-1}x'(0)/[\omega_n x(0)]\}/\omega_n$.

Fig. Free vibration of an undamped single-degree-of-freedom system

Response to Harmonic Excitation

The external force *F(t)* can be written as

$$F(t) = P_0 \cos \underline{\omega} t$$

the equation of motion

$$x'' + 2\gamma\omega_n x' + \omega_n^2 x = (P_0/m)\cos \underline{\omega} t$$

The solution can be written as

$$x = x_1 + x_2$$

$$x = e^{-\gamma\omega_n t}\left\{[x_0 - A\cos\phi]\cos\omega_d t + \frac{1}{\omega_d}[x_0 + \gamma\omega_n(x_0 - A\cos\phi) - \underline{\omega} A\sin\phi]\sin\omega_d t\right\} + A\cos(\underline{\omega} t - \phi)$$

Response to Harmonic Excitation

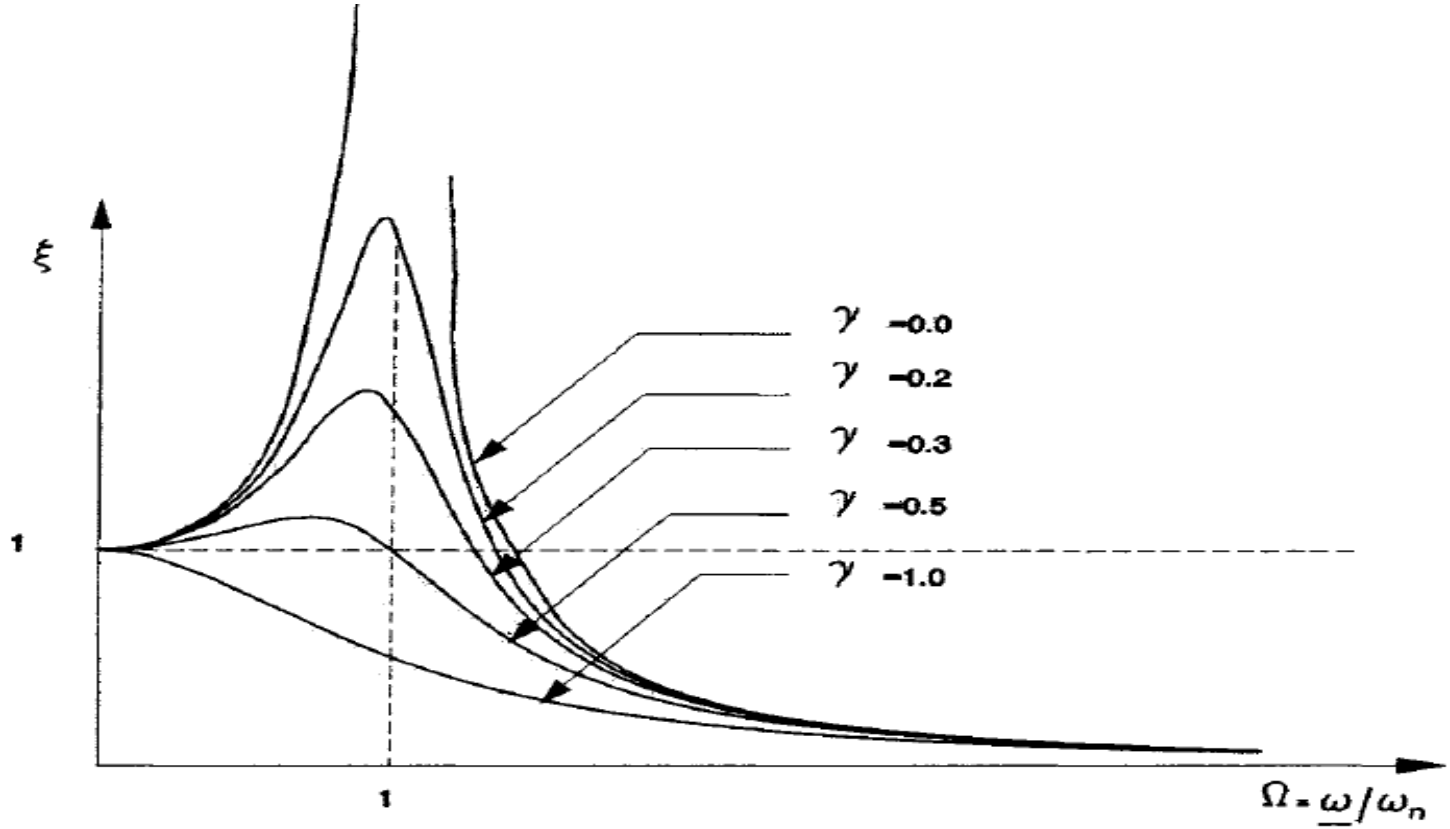

Curves of the dynamic amplification factor $\xi = x_{max}/x_{st}$ vs Ω for different values of γ.

Fig. Curves of the dynamic amplification factor vs Ω for different values of ɤ

Response to an Impulsive Excitation

Dirac-delta function or a unit impulse function *8(t - a)* is defined as

$$\delta(t-a) = 0 \qquad \text{for } t \neq a$$

$$\int_{-\infty}^{\infty} \delta(t-a)\,\mathrm{d}t = \int_{a-\varepsilon/2}^{a+\varepsilon/2}{}_{\varepsilon\to 0} \delta(t-a)\,\mathrm{d}t = 1$$

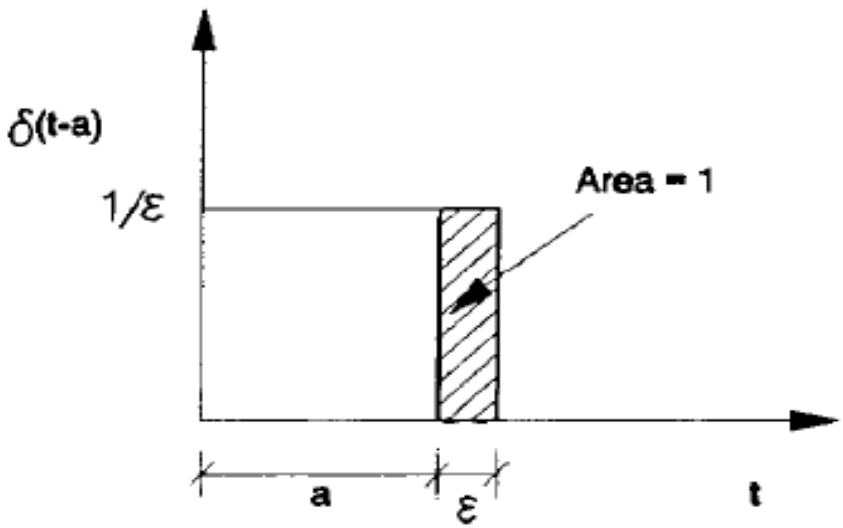

Fig. Dirac-delta function definition.

Response to an Impulsive Excitation

we can write $$mx'' + cx' + kx = F\delta(t)$$

$$x(t) = e^{-\gamma\omega_n t}\left[\frac{x'(0^+)}{\omega_d}\sin\omega_d t\right] = \frac{F}{m\omega_d}e^{-\gamma\omega_n t}\sin\omega_d t \qquad \text{for } t > 0$$

$$= 0 \qquad \text{for } t \preceq 0$$

Hence, if F = 1, we will have the impulsive response h(t) given by

$$h(t) = \frac{1}{m\omega_d}e^{-\gamma\omega_n t}\sin\omega_d t \qquad \text{for } t > 0$$

$$= 0 \qquad \text{for } t \preceq 0$$

and for a unit impulse applied at t = r, the response reads

$$h(t-\tau) = \frac{1}{m\omega_d}e^{-\gamma\omega_n(t-\tau)}\sin\omega_d(t-\tau) \qquad \text{for } t > \tau$$

$$= 0 \qquad \text{for } t \preceq \tau$$

Response to an Impulsive Excitation

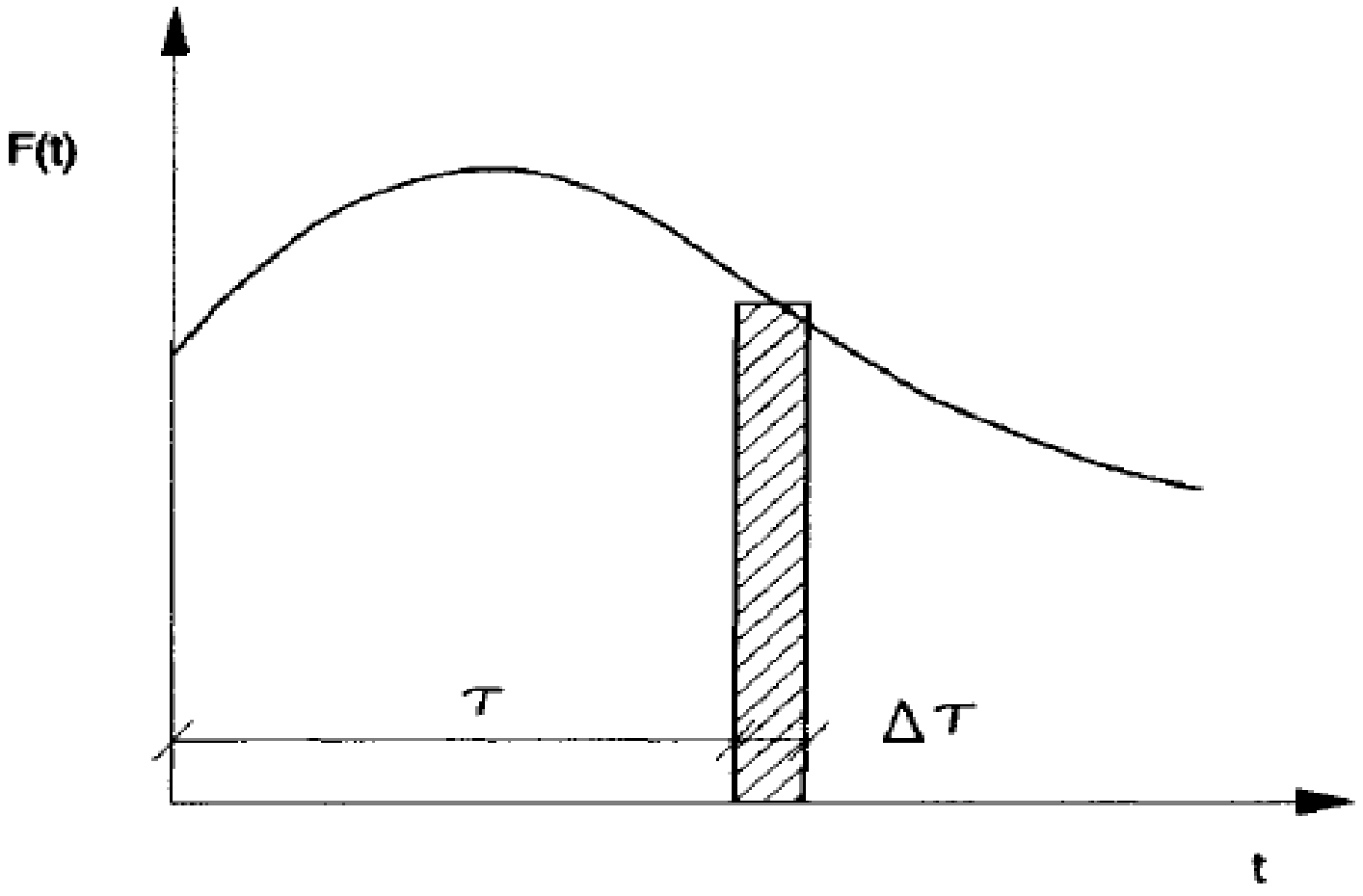

Fig. Deterministic function.

Response to a step excitation

A unit step function is defined as

$$u(t-\tau) = 0 \qquad \text{for } t \preceq \tau$$

$$u(t-\tau) = 1 \qquad \text{for } t > \tau$$

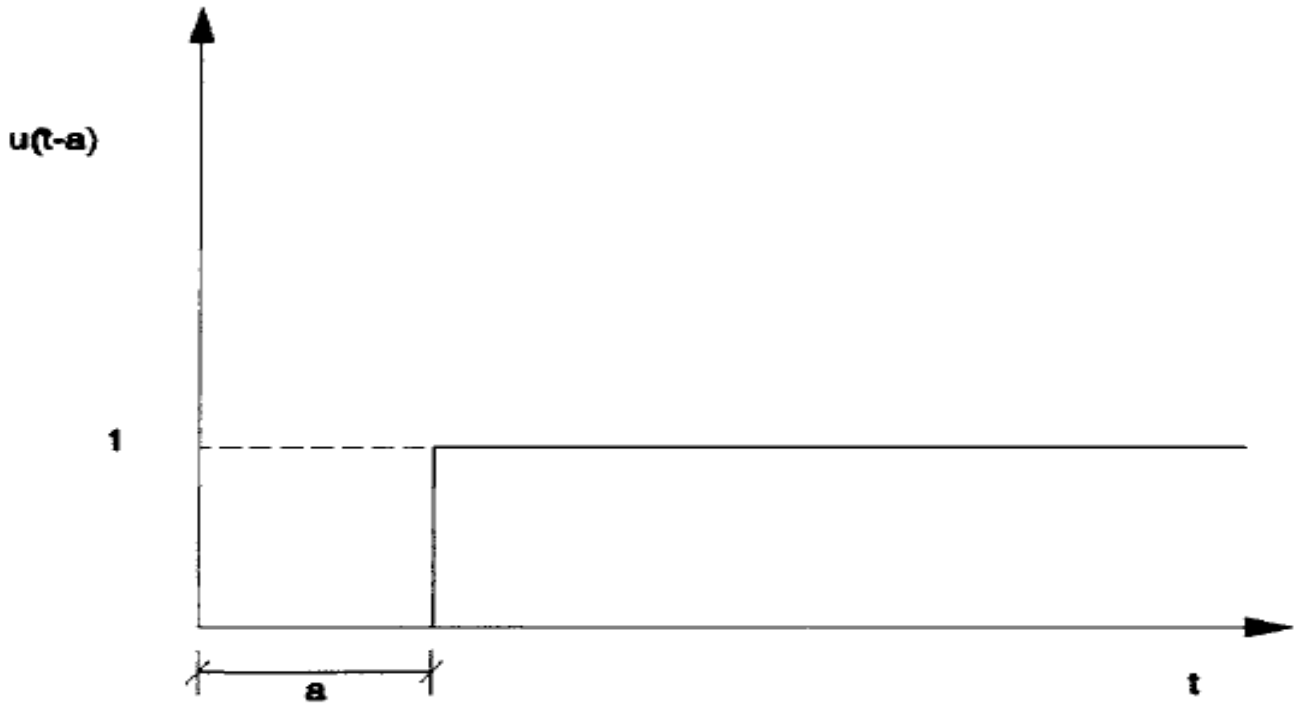

Fig. Definition of a unit step function.

Response to a step excitation

Applying Duhamel's integral for the case of a step function applied at $t = 0$ with null initial conditions, we get

$$g(t) = \int_0^t u(\tau)h(t-\tau)\,\mathrm{d}\tau$$

$$= \frac{1}{m\omega_d}\int_0^t e^{-\gamma\omega_n(t-\tau)}\sin\omega_d(t-\tau)\,\mathrm{d}\tau$$

$$g(t) = \frac{1}{k}\left[1 - e^{-\gamma\omega_n t}\left(\cos\omega_d t + \frac{\gamma\omega_n}{\omega_d}\sin\omega_d t\right)\right]$$

Response to periodic excitation (Fourier series)

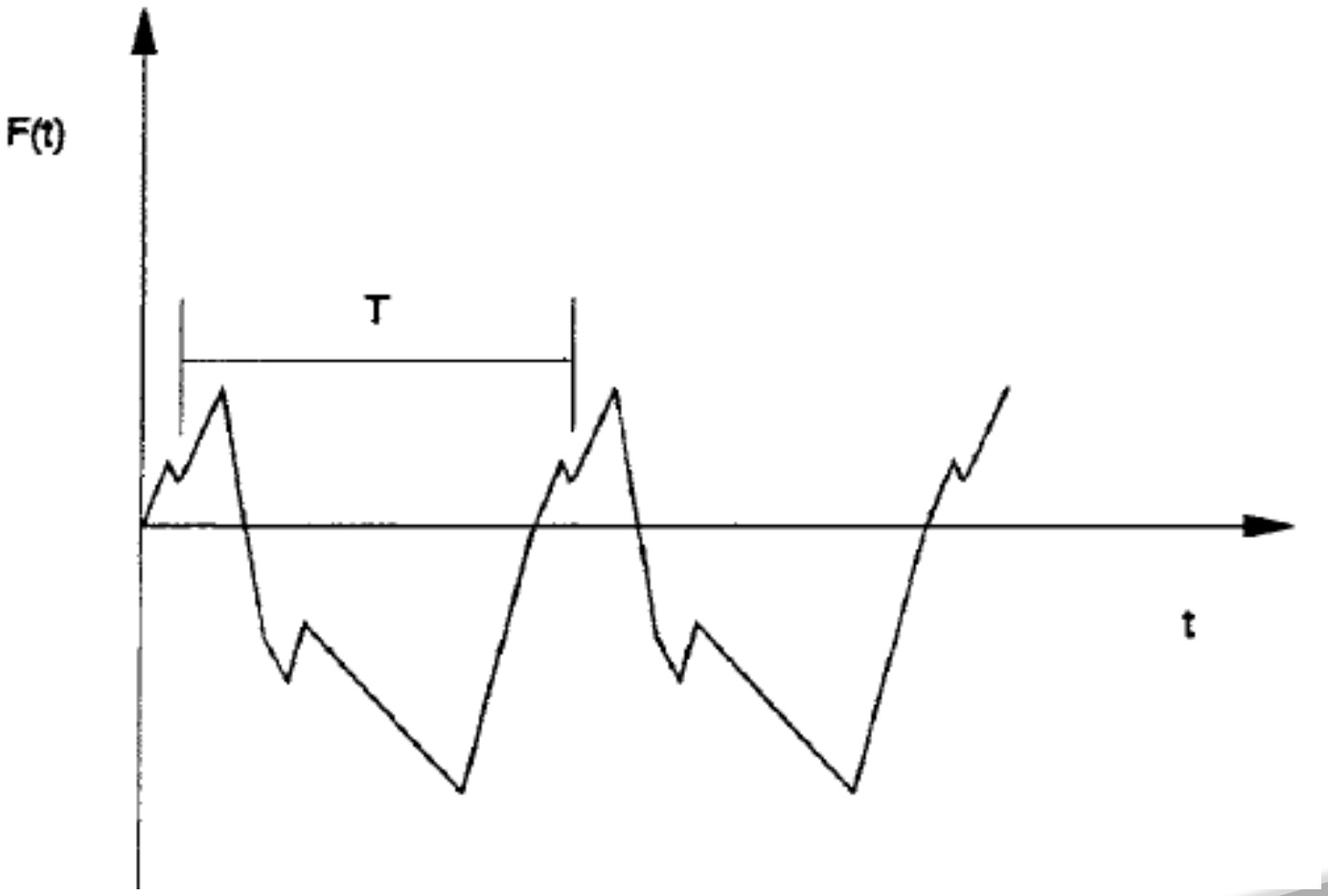

Fig. Periodic function.

Response to periodic excitation (Fourier series)

Figure represents a periodic external applied load F(t) with a period T. We call 2n/ T the fundamental frequency of excitation and denote it by

$$\omega_0 = 2\pi / T$$

Now, if the function F(t) is periodic and possesses a finite number of discontinuities and if the following relation is satisfied:

then from the theory of Fourier analysis, we can write F(t) as

$$\int_0^T |F(t)|\, dt < \infty$$

$$F(t) = \frac{a_0}{T} + \frac{2}{T}\left(\sum_{n=1}^{\infty} a_n \cos n\omega_0 t + b_n \sin n\omega_0 t\right)$$

Response to periodic excitation (Fourier series)

we can write the permanent solution response as

$$x(t) = \frac{1}{kT}\left(a_0 + 2\sum_{n=1}^{\infty}\left[\left(1-\Omega_n^2\right)^2 + (2\gamma\Omega_n)^2\right]^{-1}\left\{\left[2\gamma\Omega_n a_n + \left(1-\Omega_n^2\right)b_n\right]\right.\right.$$

$$\left.\left.\times \sin n\omega_0 t + \left[\left(1-\Omega_n^2\right)a_n - 2\gamma\Omega_n b_n\right]\cos n\omega_0 t\right\}\right)$$

Response to a Periodic excitation(Fourier Transform)

Consider again the exponential expansion:

$$F(t) = \sum_{-\infty}^{\infty} c_n e^{in\omega_0 t} \qquad n = \pm 1, \pm 2, \pm 3, \ldots \qquad \omega_0 = 2\pi / T$$

and the series coefficient given by

$$c_n = \frac{1}{T} \int_0^T F(t) e^{-in\omega_0 t} \, dt \qquad n = \pm 1, \pm 2, \pm 3, \ldots$$

We obtain

$$x(t) = \frac{1}{2\pi} \int_{-\infty}^{\infty} H(\omega) F(\omega) e^{i\omega t} \, d\omega$$

Laplace transforms (Transfer Function)

The Laplace transform of a function *x(t)* is defined as

$$x(s) = \boldsymbol{L}[x(t)] = \int_0^\infty e^{-st} x(t)\,\mathrm{d}t$$

we can obtain the Laplace transform of the velocity and the acceleration as

$$x'(s) = \boldsymbol{L}[x'(t)] = \int_0^\infty e^{-st} \frac{\mathrm{d}x(t)}{\mathrm{d}t}\,\mathrm{d}t$$

$$= [e^{-st} x(t)]_0^\infty + s \int_0^\infty e^{-st} x(t)\,\mathrm{d}t$$

$$= sx(s) - x(0)$$

Laplace transforms (Transfer Function)

$$x''(s) = L[x''(t)] = \int_0^\infty e^{-st} \frac{d^2x(t)}{dt^2} dt$$

$$= \left[e^{-st} \frac{dx(t)}{dt} \right]_0^\infty + s \int_0^\infty e^{-st} \frac{dx(t)}{dt} dt$$

$$= s^2 x(s) - sx(0) - x'(0)$$

UNIT-II
MULTI-DEGREE-OF-FREEDOM LINEAR SYSTEMS

Equations of motion, free vibration, the Eigen value problem, response to an external applied load, damping effect; Modeling of continuous systems as multi-degree-of-freedom systems, using Newton's second law to derive equations of motion, influence coefficients - stiffness influence coefficients, flexibility influence coefficients, inertia influence coefficients; potential and kinetic energy expressions in matrix form, generalized coordinates and generalized forces, Lagrange‘s equations to derive equations of motion, equations of motion of undamped systems in matrix form, eigenvalue problem, solution of the Eigen value problem, expansion theorem, unrestrained systems, free vibration of undamped systems; forced vibration of undamped systems using modal analysis, forced vibration of viscously damped systems.

UNIT - II

CLOs	Course Learning Outcome
CLO5	Become proficient in the modeling and analysis of multi-dof systems - Lagrange's equations, reduction to one-dof systems for proportionally damped systems, modal analysis, vibration absorbers, vibration transmission, Fourier transforms.
CLO6	Convert the physical domain to mathematical formulation and development of governing equation based on number of masses in the system.
CLO7	Understanding the phenomenon of generalized coordinates and generalized forces, Lagrange's equations to derive equations of motion.

Equations of Motion

Applying Lagrange equations,

$$\frac{\mathrm{d}}{\mathrm{d}t}\left(\frac{\partial L}{\partial q_i'}\right) - \frac{\partial L}{\partial q_i} + \frac{\partial D}{\partial q_i'} = Q_i$$

We obtain the equations of motion of a discrete elastic mechanical system of n degrees of freedom written in matrix form as

$$[M]\{q''\} + [B]\{q'\} + [K]\{q\} = \{Q\}$$

Where {Q} is the column of the generalized external forces.

Free Vibration: The Eigen Value Problem

- Undamped Systems:

Equations of motion for undamped free vibration read

$$[M]\{q''\} + [K]\{q\} = \{0\}$$

The system of equations is a system of second-order differential equations with constant coefficients, whose solution can be written as

Defining $\{q\} = \{q_0\}e_i^{P_i t}$ $\quad P_i^2[M]\{q_0\} + [K]\{q_0\} = \{0\}$

We get

$$\lambda_i = -P_i^2 \qquad [[K] - \lambda_i[M]]\{q_0\} = \{0\}$$

This represents an eigenvalue problem.

Damped Systems

For free vibration of a damped system, the equations of motion read

The system of equations admits solutions in the form

$$[M]\{q''\} + [C]\{q'\} + [K]\{q\} = \{0\}$$

Where s and {q0} are in general complex. After substitution we obtain

$$\{q\} = e^{st}\{q_0\}$$

This represents an eigenvalue problem of the second order.

$$s^2[M]\{q_0\} + s[C]\{q_0\} + [K]\{q_0\} = \{0\}$$

Response to an External Applied Load

$$[M]\{q''\} + [C]\{q'\} + [K]\{q\} = \{F(t)\}$$

For an externally applied load, the equations of motion read

The solution falls into two categories, the modal superposition technique and numerical methods.

- The Modal Superposition Technique:

The modal superposition technique consists of transforming the equations of motion into the modal base of the associated conservative system. The associated conservative system is obtained by the elimination of the damping from the equations of motion. For free vibration, the equations of motion of the associated conservative system read

Response to an External Applied Load

$$[M]\{q''\} + [K]\{q\} = \{0\}$$

The solution will give the eigenvalue matrix [λ] and the eigenvector matrix [Q]. Making the transformation

$$\{q\} = [Q]\{\eta\}$$

Where {η} is the vector of the modal amplitude, the equations of motion read

$$[M][Q]\{\eta''\} + [C][Q]\{\eta'\} + [K][Q]\{\eta\} = \{F\}$$

$$\lceil\mu\rfloor\{\eta''\} + \lceil\beta\rfloor\{\eta'\} + \lceil\gamma\rfloor\{\eta\} = \{\phi\}$$

Response to an External Applied Load

The result reads

$$\eta_i(t) = e^{-\omega_i \xi_i t}\left[\frac{1}{\omega_{d_i}}\{\eta_i'(0) + \omega_i \xi_i \eta_i(0)\}\sin\omega_{d_i} t + \eta_i(0)\cos\omega_{d_i} t\right]$$

$$+ \frac{1}{\omega_{d_i}\mu_i}\int_0^t e^{-\omega_i \xi_i (t-\sigma)}\phi_i(\sigma)\sin\omega_{d_i}(t-\sigma)\,\mathrm{d}\sigma \qquad i = 1, 2, \ldots, n$$

Numerical Methods

The modal superposition technique described needs the determination of the modal values of the associated conservative system as a first step in the solution procedure,

which is a time-consuming process, especially if such information will not be used in further analyses.

Numerical methods, on the other hand, work directly on the coupled equations of motion and can be basically described as a step-by-step successive extrapolation procedure.

Damping Effect

To include a damping effect in the dynamic formulation, we need to consider the work done by the damping forces and include it in Hamilton's principle. Damping forces are difficult, if not impossible, to calculate. However, two types of damping forces have been extensively used and will be treated here, namely viscous damping and structural damping.

- Viscous Damping:

A viscous damping arises when a body is moving in a fluid (e.g., a dashpot); in such a case, we can assume that the damping force is proportional to the velocity, and we write

Damping Effect

$$F_D = \gamma q' \qquad W_D = \int_V \{q\}^T \{F_D\}\, dv \qquad F_D = ig F_E$$

The equations of motion of the whole structure read

$$[M]\{q''\} + [C]\{q'\} + [K]\{q\} = \{F\}$$

- Structural Damping:

Structural damping, also known as hysteretic or solid damping, is due to internal friction or friction among components of the system and is proportional to elastic internal forces and acts in the velocity direction. In such cases, if a harmonic motion was assumed for the solution of the problem, we can write the damping force as

Modeling of continuous systems as multi-degree-of - Freedom systems

Different methods can be used to approximate a continuous system as a multi degree-of-freedom system. A simple method involves replacing the distributed mass or inertia of the system by a finite number of lumped masses or rigid bodies. The lumped masses are assumed to be connected by mass less elastic and damping members. Linear (or angular) coordinates are used to describe the motion of the lumped masses (or rigid bodies). Such models are called lumped-parameter or lumped-mass or discrete-mass systems.

Modeling of continuous systems as multi-degree -of- Freedom systems

The minimum number of coordinate's necessary to describe the motion of the lumped masses and rigid bodies define the number of degrees of freedom of the system.

Naturally, the larger the number of lumped masses used in the model, the higher the accuracy of the resulting analysis.

Using Newton's second law to derive equations of motion

The following procedure can be adopted to derive the equations of motion of a multi degree of- freedom system using Newton s second law of motion:

1. Set up suitable coordinates to describe the positions of the various point masses and rigid bodies in the system. Assume suitable positive directions for the displacements, velocities, and accelerations of the masses and rigid bodies.

2. Determine the static equilibrium configuration of the system and measure the displacements of the masses and rigid bodies from their respective static equilibrium positions.

Using Newton's second law to derive equations of motion

3. Draw the free-body diagram of each mass or rigid body in the system. Indicate the spring, damping, and external forces acting on each mass or rigid body when positive displacement and velocity are given to that mass or rigid body.

4. Apply Newton s second law of motion to each mass or rigid body shown by the free body diagram as

$$m_i \ddot{x}_i = \sum_j F_{ij} \text{ (for mass } m_i\text{)}$$

$$J_i \ddot{\theta}_i = \sum_j M_{ij} \text{ (for rigid body of inertia } J_i\text{)}$$

Influence coefficients

The equations of motion of a multi degree-of-freedom system can also be written in terms of influence coefficients, which are extensively used in structural engineering.

Basically, one set of influence coefficients can be associated with each of the matrices involved in the equations of motion.

The influence coefficients associated with the stiffness and mass matrices are, respectively, known as the stiffness and inertia influence coefficients.

Influence coefficients

In some cases, it is more convenient to rewrite the equations of motion using the inverse of the stiffness matrix (known as the flexibility matrix) or the inverse of the mass matrix.

The influence coefficients corresponding to the inverse stiffness matrix are called the flexibility influence coefficients, and those corresponding to the inverse mass matrix are known as the inverse inertia coefficients.

Stiffness influence coefficients

For a simple linear spring, the force necessary to cause a unit elongation is called the stiffness of the spring.

In more complex systems, we can express the relation between the displacements at a point and the forces acting at various other points of the system by means of stiffness influence coefficients.

$$F_i = \sum_{j=1}^{n} k_{ij} x_j, \qquad i = 1, 2, \ldots, n$$

Stiffness influence coefficients

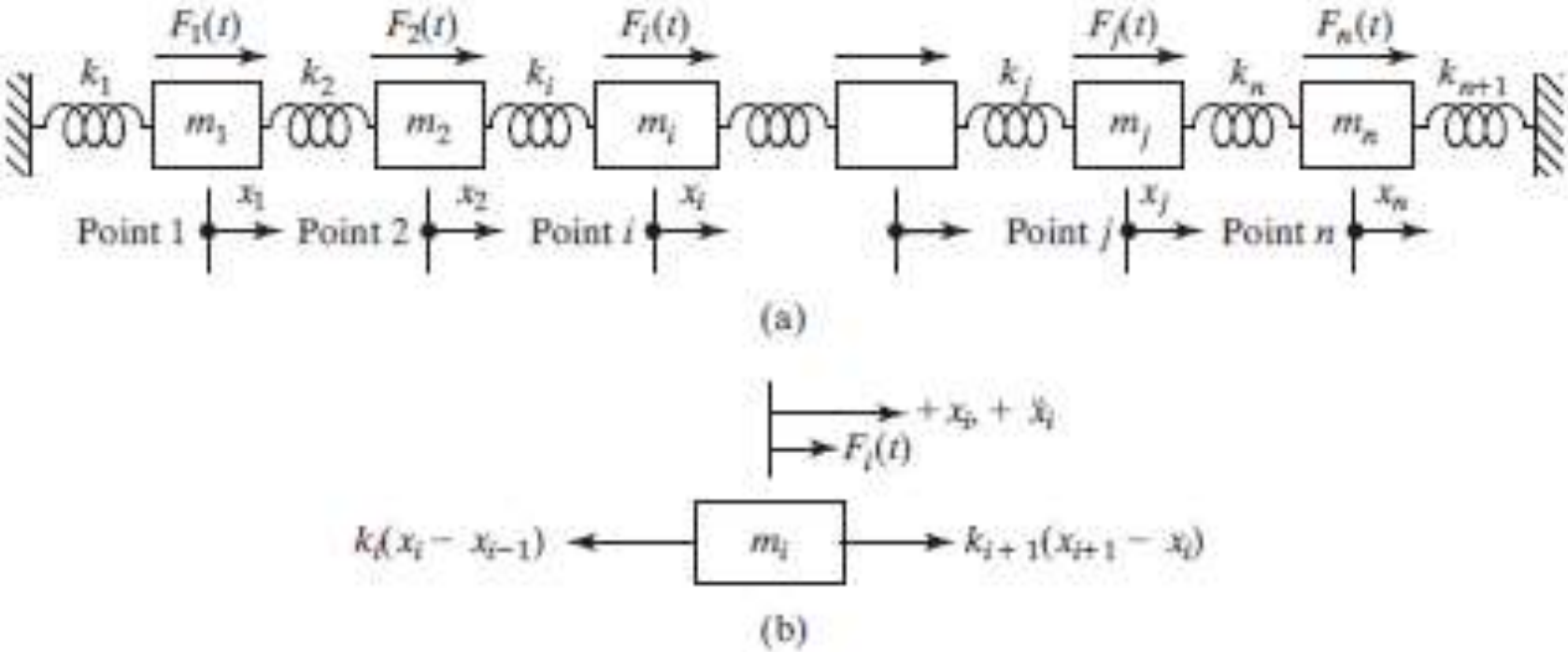

Multi degree-of-freedom spring-mass system.

Aspects of stiffness influence coefficients are to be noted

1. Since the force required at point i to cause a unit deflection at point j and zero deflection at all other points is the same as the force required at point j to cause a unit deflection at point i and zero deflection at all other points.

2. The stiffness influence coefficients can be calculated by applying the principles of statics and solid mechanics.

3. The stiffness influence coefficients for torsional systems can be defined in terms of unit angular displacement and the torque that causes the angular displacement.

Flexibility influence coefficients

The generation of the flexibility influence coefficients, proves to be simpler and more convenient than stiffness influence coefficients.

$$x_i = \sum_{j=1}^{n} x_{ij} = \sum_{j=1}^{n} a_{ij} F_j, \quad i = 1, 2, \ldots, n$$

$$\vec{x} = [a]\,\vec{F}$$

$$[a] = \begin{bmatrix} a_{11} & a_{12} & \cdots & a_{1n} \\ a_{21} & a_{22} & \cdots & a_{2n} \\ \vdots & & & \\ a_{n1} & a_{n2} & \cdots & a_{nn} \end{bmatrix}$$

Inertia influence coefficients

The elements of the mass matrix, mij, are known as the inertia influence coefficients.

$$F_i = \sum_{j=1}^{n} m_{ij}\dot{x}_j$$

In matrix form $\vec{F} = [m]\dot{\vec{x}}$

The velocity and impulse vectors given by

$$\vec{x} = \begin{Bmatrix} \dot{x}_1 \\ \dot{x}_2 \\ \cdot \\ \cdot \\ \cdot \\ \dot{x}_n \end{Bmatrix}, \quad \vec{F} = \begin{Bmatrix} F_1 \\ F_2 \\ \cdot \\ \cdot \\ \cdot \\ F_n \end{Bmatrix} \quad [m] = \begin{bmatrix} m_{11} & m_{12} & \cdots & m_{1n} \\ m_{21} & m_{22} & \cdots & m_{2n} \\ \cdot & \cdot & \cdots & \cdot \\ \cdot & \cdot & \cdots & \cdot \\ \cdot & \cdot & \cdots & \cdot \\ m_{n1} & m_{n2} & \cdots & m_{nn} \end{bmatrix}$$

Potential and kinetic energy expressions in matrix form

The elastic potential energy (also known as strain energy or energy of deformation) of the ith spring is given by

$$V_i = \frac{1}{2} F_i x_i$$

The total potential energy can be expressed as

$$V = \sum_{i=1}^{n} V_i = \frac{1}{2} \sum_{i=1}^{n} F_i x_i$$

In matrix form as

$$V = \frac{1}{2} \vec{x}^T [k] \vec{x}$$

The stiffness matrix is given by

$$[k] = \begin{bmatrix} k_{11} & k_{12} & \cdots & k_{1n} \\ k_{21} & k_{22} & \cdots & k_{2n} \\ \vdots & & & \\ k_{n1} & k_{n2} & \cdots & k_{nn} \end{bmatrix}$$

Generalized Coordinates and Generalized Forces

The equations of motion of a vibrating system can be formulated in a number of different coordinate systems. As stated earlier, n independent coordinates are necessary to describe the motion of a system having n degrees of freedom. Any set of n independent coordinates is called generalized coordinates, usually designated by q1, q2, q3…..qn. The generalized coordinates may be lengths, angles, or any other set of numbers that define the configuration of the system at any time uniquely. They are also independent of the conditions of constraint.

The configuration of the system can be specified by the six coordinates

Generalized Coordinates and Generalized Forces

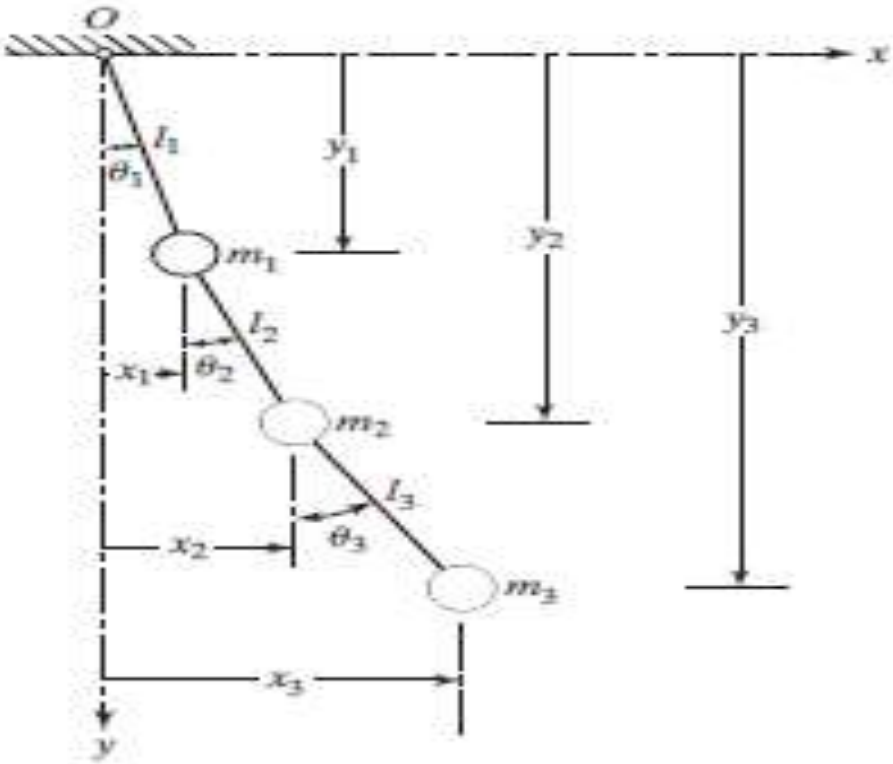

Triple pendulum

$$x_1^2 + y_1^2 = l_1^2$$
$$(x_2 - x_1)^2 + (y_2 - y_1)^2 = l_2^2$$
$$(x_3 - x_2)^2 + (y_3 - y_2)^2 = l_3^2$$

(xj, yj), j = 1, 2, 3. However, these coordinates are not independent but are constrained by the relations

Lagrange s Equations to Derive Equations of Motion

The equations of motion of a vibrating system can often be derived in a simple manner in terms of generalized coordinates by the use of Lagrange s equations. Lagrange equations can be stated, for an n-degree-of-freedom system, as

$$\frac{d}{dt}\left(\frac{\partial T}{\partial \dot{q}_j}\right) - \frac{\partial T}{\partial q_j} + \frac{\partial V}{\partial q_j} = Q_j^{(n)}, \qquad j = 1, 2, \ldots, n$$

The generalized force can be computed as follows:

$$Q_j^{(n)} = \sum_k \left(F_{xk}\frac{\partial x_k}{\partial q_j} + F_{yk}\frac{\partial y_k}{\partial q_j} + F_{zk}\frac{\partial z_k}{\partial q_j} \right)$$

Thus the equations of motion of the vibrating system can be derived, provided the energy expressions are available.

Equations of Motion of Undamped Systems in Matrix Form

The equations of motion of a multi degree-of-freedom system in matrix form from Lagrange s equations.

$$\frac{d}{dt}\left(\frac{\partial T}{\partial \dot{x}_i}\right) - \frac{\partial T}{\partial x_i} + \frac{\partial V}{\partial x_i} = F_i, \quad i = 1, 2, \ldots n$$

The kinetic and potential energies of a multi degree-of-freedom system can be expressed in matrix form as

$$T = \frac{1}{2}\dot{\vec{x}}^T[m]\dot{\vec{x}}$$

$$V = \frac{1}{2}\vec{x}^T[k]\vec{x}$$

Equations of Motion of Undamped Systems in Matrix Form

Where the column vector of the generalized coordinates

$$\vec{x} = \begin{Bmatrix} x_1 \\ x_2 \\ \cdot \\ \cdot \\ \cdot \\ x_n \end{Bmatrix}$$

From the theory of matrices,

$$\frac{\partial T}{\partial \dot{x}_i} = \frac{1}{2}\vec{\delta}^T[m]\dot{\vec{x}} + \frac{1}{2}\dot{\vec{x}}^T[m]\vec{\delta} = \vec{\delta}^T[m]\dot{\vec{x}}$$

$$= \vec{m}_i^T\dot{\vec{x}}, \quad i = 1, 2, \ldots, n$$

Equations of Motion of Undamped Systems in Matrix Form

All the relations represented can be expressed as

$$\frac{\partial T}{\partial \dot{x}_i} = \vec{m}_i^T \dot{\vec{x}}$$

Differentiation of Equation with respect to time gives

$$\frac{d}{dt}\left(\frac{\partial T}{\partial \dot{x}_i}\right) = \vec{m}_i^T \ddot{\vec{x}}, \qquad i = 1, 2, \ldots, n$$

So the equations of motion become

$$[m]\ddot{\vec{x}} + [k]\vec{x} = \vec{0}$$

Eigen value Problem

Assuming a solution of the form

$$x_i(t) = X_i T(t), \qquad i = 1, 2, \ldots, n$$

The configuration of the system, given by the vector

$$\overline{X} = \begin{Bmatrix} X_1 \\ X_2 \\ \cdot \\ \cdot \\ \cdot \\ X_n \end{Bmatrix}$$

is known as the mode shape of the system

$$[m]\overline{X}\ddot{T}(t) + [k]\overline{X}T(t) = \overline{0}$$

Eigen value Problem

From which we can obtain the relations

$$\frac{\ddot{T}(t)}{T(t)} = \frac{\left(\sum_{j=1}^{n} k_{ij} X_j\right)}{\left(\sum_{j=1}^{n} m_{ij} X_j\right)}, \qquad i = 1, 2, \ldots, n$$

The solution of Equation can be expressed as

$$T(t) = C_1 \cos(\omega t + \phi)$$

Where constants known as the amplitude and the phase angle, respectively

Solution of the Eigen value Problem

Equation $$\left[[k] - \omega^2[m]\right]\overrightarrow{X} = \vec{0}$$

Can also be expressed as $$\left[\lambda[k] - [m]\right]\overrightarrow{X} = \vec{0}$$

By multiplying we obtain $$\left[\lambda[I] - [D]\right]\overrightarrow{X} = \vec{0}$$

Where [I] is the identity matrix and $[D] = [k]^{-1}[m]$

is called the dynamical matrix. The eigenvalue problem is known as the standard eigenvalue problem.

Expansion Theorem

The eigenvectors, due to their property of orthogonality, are linearly independent. If x is an arbitrary vector in n-dimensional space, it can be expressed as

$$\vec{x} = \sum_{i=1}^{n} c_i \overline{X}^{(i)}$$

The value of the constant Ci can be determined as

$$c_i = \frac{\overline{X}^{(i)T}[m]\,\vec{x}}{\overline{X}^{(i)T}[m]\,\overline{X}^{(i)}} = \frac{\overline{X}^{(i)T}[m]\,\vec{x}}{M_{ii}}, \qquad i = 1, 2, \ldots, n$$

is known as the expansion theorem .

$$c_i = \overline{X}^{(i)T}[m]\,\vec{x}, \qquad i = 1, 2, \ldots, n$$

It is very useful in finding the response of multi degree-of-freedom systems subjected to arbitrary forcing conditions according to a procedure called modal analysis.

Unrestrained Systems

Consider the equation of motion for free vibration in normal coordinates: $\ddot{q}(t) + \omega^2 q(t) = 0$ $\qquad \omega^2[m]\overline{X}^{(0)} = [k]\overline{X}^{(0)}$

The eigenvalue problem can be expressed as

That is,

$$
\begin{aligned}
k_{11}X_1^{(0)} + k_{12}X_2^{(0)} + \cdots + k_{1n}X_n^{(0)} &= 0 \\
k_{21}X_1^{(0)} + k_{22}X_2^{(0)} + \cdots + k_{2n}X_n^{(0)} &= 0 \\
&\vdots \\
k_{n1}X_1^{(0)} + k_{n2}X_2^{(0)} + \cdots + k_{nn}X_n^{(0)} &= 0
\end{aligned}
$$

Free Vibration of Undamped Systems

The equation of motion for the free vibration of an undamped system can be expressed in matrix form as

$$[m]\ddot{\vec{x}} + [k]\vec{x} = \vec{0}$$

The most general solution can be expressed as a linear combination of all possible solutions given by

$$\vec{x}(t) = \sum_{i=1}^{n} \overline{X}^{(i)} A_i \cos(\omega_i t + \phi_i)$$

Free Vibration of Undamped Systems

If

$$\vec{x}(0) = \begin{Bmatrix} x_1(0) \\ x_2(0) \\ \cdot \\ \cdot \\ \cdot \\ x_n(0) \end{Bmatrix} \quad \text{and} \quad \dot{\vec{x}}(0) = \begin{Bmatrix} \dot{x}_1(0) \\ \dot{x}_2(0) \\ \cdot \\ \cdot \\ \cdot \\ \dot{x}_n(0) \end{Bmatrix}$$

Denote the initial displacements and velocities given to the system,

$$\vec{x}(0) = \sum_{i=1}^{n} \vec{X}^{(i)} A_i \cos \phi_i$$

$$\dot{\vec{x}}(0) = -\sum_{i=1}^{n} \vec{X}^{(i)} A_i \omega_i \sin \phi_i$$

Which can be solved to find the n values of Ai.

Forced Vibration of Undamped Systems Using Modal Analysis

When external forces act on a multi degree-of-freedom system, the system undergoes forced vibration.

For a system with n coordinates or degrees of freedom, the governing equations of motion are a set of n coupled ordinary differential equations of second order.

The solution of these equations becomes more complex when the degree of freedom of the system (n) is large and/or when the forcing functions are non-periodic.

A more convenient method known as modal analysis can be used to solve the problem. In this method, the expansion theorem is used, and the displacements of the masses are expressed as a linear combination of the normal modes of the system.

Modal Analysis

The equations of motion of a multi degree-of-freedom system under external forces are given by

$$[m]\ddot{\vec{x}} + [k]\vec{x} = \vec{F}$$

To solve Equation by modal analysis, it is necessary first to solve the eigenvalue problem.

$$\omega^2[m]\vec{X} = [k]\vec{X}$$

the solution vector of Equation can be expressed by a linear combination of the normal modes

$$\vec{x}(t) = q_1(t)\vec{X}^{(1)} + q_2(t)\vec{X}^{(2)} + \cdots + q_n(t)\vec{X}^{(n)}$$

can be rewritten as

$$\vec{x}(t) = [X]\vec{q}(t)$$

Modal Analysis

Where $$\vec{q}(t) = \begin{Bmatrix} q_1(t) \\ q_2(t) \\ \vdots \\ q_n(t) \end{Bmatrix}$$

The initial generalized displacements and the initial generalized velocities can be obtained from the initial values of the physical displacements and physical velocities as:

$$\vec{q}(0) = [X]^T[m]\vec{x}(0)$$

$$\dot{\vec{q}}(0) = [X]^T[m]\dot{\vec{x}}(0)$$

Modal Analysis

Where

$$\vec{q}(0) = \begin{Bmatrix} q_1(0) \\ q_2(0) \\ \vdots \\ q_n(0) \end{Bmatrix}, \qquad \vec{x}(0) = \begin{Bmatrix} x_1(0) \\ x_2(0) \\ \vdots \\ x_n(0) \end{Bmatrix},$$

$$\dot{\vec{q}}(0) = \begin{Bmatrix} \dot{q}_1(0) \\ \dot{q}_2(0) \\ \vdots \\ \dot{q}_n(0) \end{Bmatrix}, \qquad \dot{\vec{x}}(0) = \begin{Bmatrix} \dot{x}_1(0) \\ \dot{x}_2(0) \\ \vdots \\ \dot{x}_n(0) \end{Bmatrix}$$

Forced Vibration of Viscously Damped Systems

Modal analysis, applies only to undamped systems. In many cases, the influence of damping upon the response of a vibratory system is minor and can be disregarded.

However, it must be considered if the response of the system is required for a relatively long period of time compared to the natural periods of the system.

Further, if the frequency of excitation (in the case of a periodic force) is at or near one of the natural frequencies of the system, damping is of primary importance and must be taken into account.

In general, since the effects are not known in advance, damping must be considered in the vibration analysis of any system.

Forced Vibration of Viscously Damped Systems

This function is defined as $R = \frac{1}{2}\dot{\vec{x}}^T[c]\dot{\vec{x}}$

Where the matrix [c] is called the damping matrix and is positive definite, like the mass and stiffness matrices. Lagrange s equations can be written as

$$\frac{d}{dt}\left(\frac{\partial T}{\partial \dot{x}_i}\right) - \frac{\partial T}{\partial x_i} + \frac{\partial R}{\partial \dot{x}_i} + \frac{\partial V}{\partial x_i} = F_i, \qquad i = 1, 2, \ldots, n$$

The equations of motion of a damped multi-degree-of-freedom system in matrix form:

$$[m]\ddot{\vec{x}} + [c]\dot{\vec{x}} + [k]\vec{x} = \vec{F}$$

Forced Vibration of Viscously Damped Systems

After substitution, we obtain

$$[m]\ddot{\vec{x}} + [\alpha[m] + \beta[k]]\dot{\vec{x}} + [k]\vec{x} = \vec{F}$$

can be rewritten as

$$[m][X]\ddot{\vec{q}}(t) + [\alpha[m] + \beta[k]][X]\dot{\vec{q}}(t) + [k][X]\vec{q}(t) = \vec{F}(t)$$

Forced Vibration of Viscously Damped Systems

The solution can be expressed as

$$q_i(t) = e^{-\zeta_i \omega_i t}\left\{\cos \omega_{di} t + \frac{\zeta_i}{\sqrt{1-\zeta_i^2}} \sin \omega_{di} t\right\} q_i(0)$$

$$+ \left\{\frac{1}{\omega_{di}} e^{-\zeta_i \omega_i t} \sin \omega_{di} t\right\} \dot{q}_0(0)$$

$$+ \frac{1}{\omega_{di}} \int_0^t Q_i(\tau) e^{-\zeta_i \omega_i (t-\tau)} \sin \omega_{di}(t-\tau)\, d\tau,$$

$$i = 1, 2, \ldots, n$$

Where

$$\omega_{di} = \omega_i \sqrt{1-\zeta_i^2}$$

UNIT-III
NONLINEAR AND RANDOM VIBRATION

Introduction to nonlinear vibrations, simple examples of nonlinear systems, physical properties of nonlinear systems, solutions of the equation of motion of a single-degree-of-freedom nonlinear system, multi-degree-of-freedom nonlinear systems. Introduction to random vibrations; classification of random processes, probability distribution and density functions, description of the mean values in terms of the probability density function, properties of the autocorrelation function, power spectral density function, properties of the power spectral density function, white noise and narrow and large bandwidth, single-degree-of-freedom response, response to a white noise.

UNIT - III

CLOs	Course Learning Outcome
CLO8	Apply the Eigen value problem and describe expansion theorem, unrestrained systems, free vibration of undamped systems; forced vibration of undamped systems.
CLO9	Understand the concepts of nonlinear vibrations, simple examples of nonlinear systems, physical properties of nonlinear systems
CLO10	Formulate simple problem solutions of the equation of motion of a single-degree-of-freedom nonlinear system, multi-degree-of-freedom nonlinear systems.
CLO11	Understand the concept of random processes, probability distribution and density functions, description of the mean values in terms of the probability density function

Introduction to Nonlinear Vibrations

The progress achieved in the past decades in the applied mechanics field is attributed to the representation of complex physical problems by simple mathematical equations.

In many applications, these equations are nonlinear. In spite of this fact, simplifications consistent with the physical situation permit, in most cases, a linearization process that simplifies the mathematical solution of the problem while conserving the precision of the physical results.

However, in few cases, the linear solutions are not sufficient to describe adequately the problem at hand because new physical phenomena are introduced and can be explained only if nonlinearity is considered.

Simple Examples of Nonlinear Systems

- Simple Pendulum in Free Vibrations

The equation of motion of the pendulum can be written as

$$mL^2\theta'' + mgL\sin\theta = 0$$

Can be written as

$$mL^2\theta'' + mgL\,\theta - mgL\frac{\theta^3}{3!} + mgL\frac{\theta^5}{5!} - \cdots = 0$$

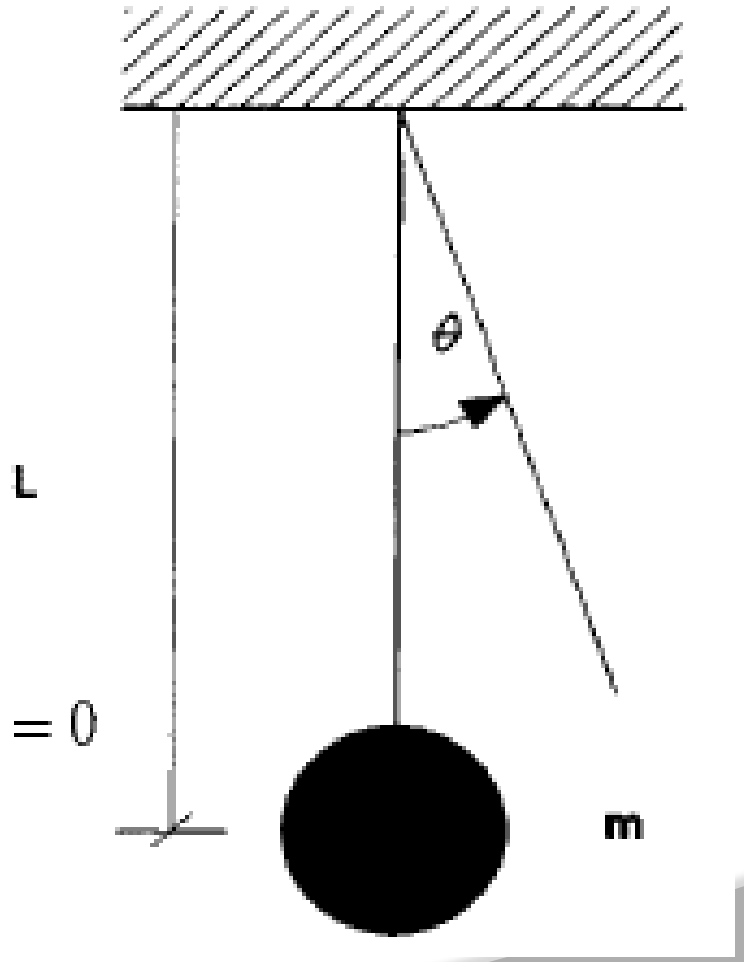

Physical Properties of Nonlinear Systems

- Undamped Free Vibrations:

Physical considerations reveal that, for a mechanical system with nonlinear stiffness in free vibrations, the period (and thus the frequency) of the response will be a function of the amplitude of vibration.

This is expected mathematically since $k = k(x)$ and therefore $T = T(x)$.

It is to be emphasized that the natural frequency is a constant and is a property of the mechanical system, despite whether the system is linear.

The frequency of response in free vibration of a linear system is constant and is equal to the natural frequency of the system, while a nonlinear system in free vibration responds with a frequency that is a function of the amplitude of vibration.

Physical Properties of Nonlinear Systems

As an example (the proof will be given in the next sections), for the dependence of the period of free vibration on the amplitude of the response, it can be shown that the period of the simple pendulum of Fig. is given by

$$T = T_0 \left[1 + \frac{1}{4}\left(\sin\frac{\theta}{2}\right)^2 + \frac{9}{64}\left(\sin\frac{\theta}{2}\right)^4 + \frac{25}{256}\left(\sin\frac{\theta}{2}\right)^6 + \cdots \right]$$

Where T_O is the period of the linear system. A plot of T / To vs 0 is shown in Fig. in next slide.

Physical Properties of Nonlinear Systems

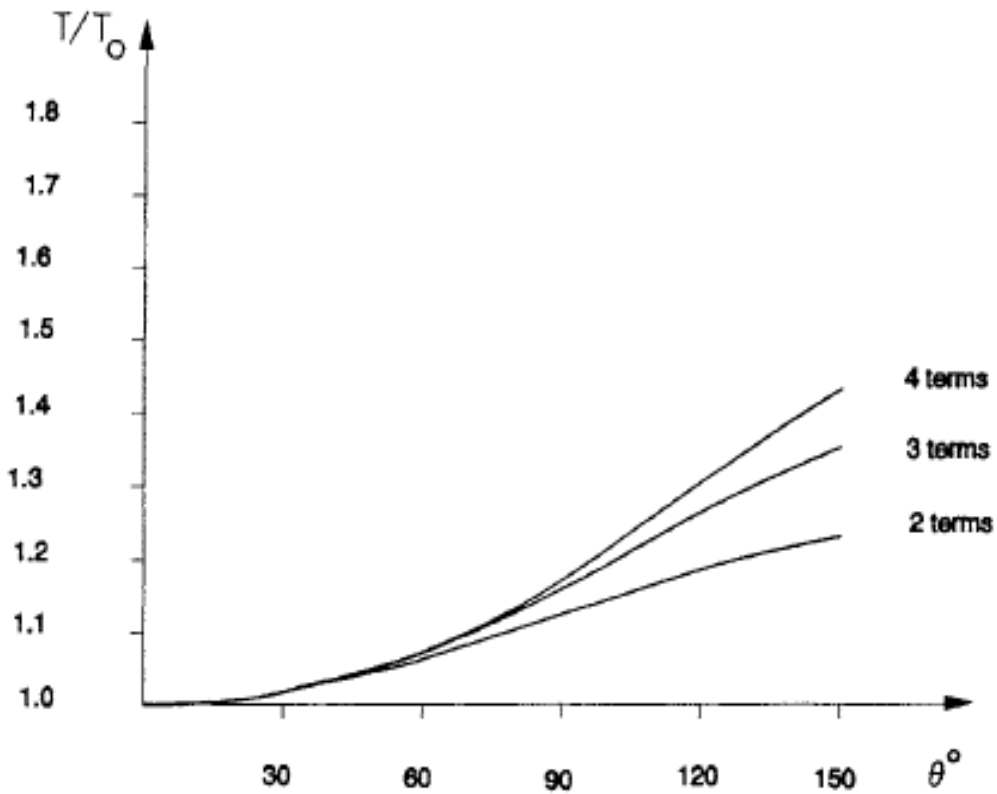

Period of free vibrations of a simple pendulum

Damped Free Vibrations

Consider a nonlinear damped system having a hard spring nonlinearity characteristic in free vibrations. The system equation of motion can be written as

$$mx'' + cx' + k_0 x + k_1 x^3 = 0$$

With initial conditions different from zero and an initial displacement value in the nonlinear regime, physical considerations and Eq. reveal that the response will appear as the curve sketched in Fig.

notice that, for nonlinear amplitude values, we will have smaller periods of response (thus higher frequencies) compared to the linear part.

Damped Free Vibrations

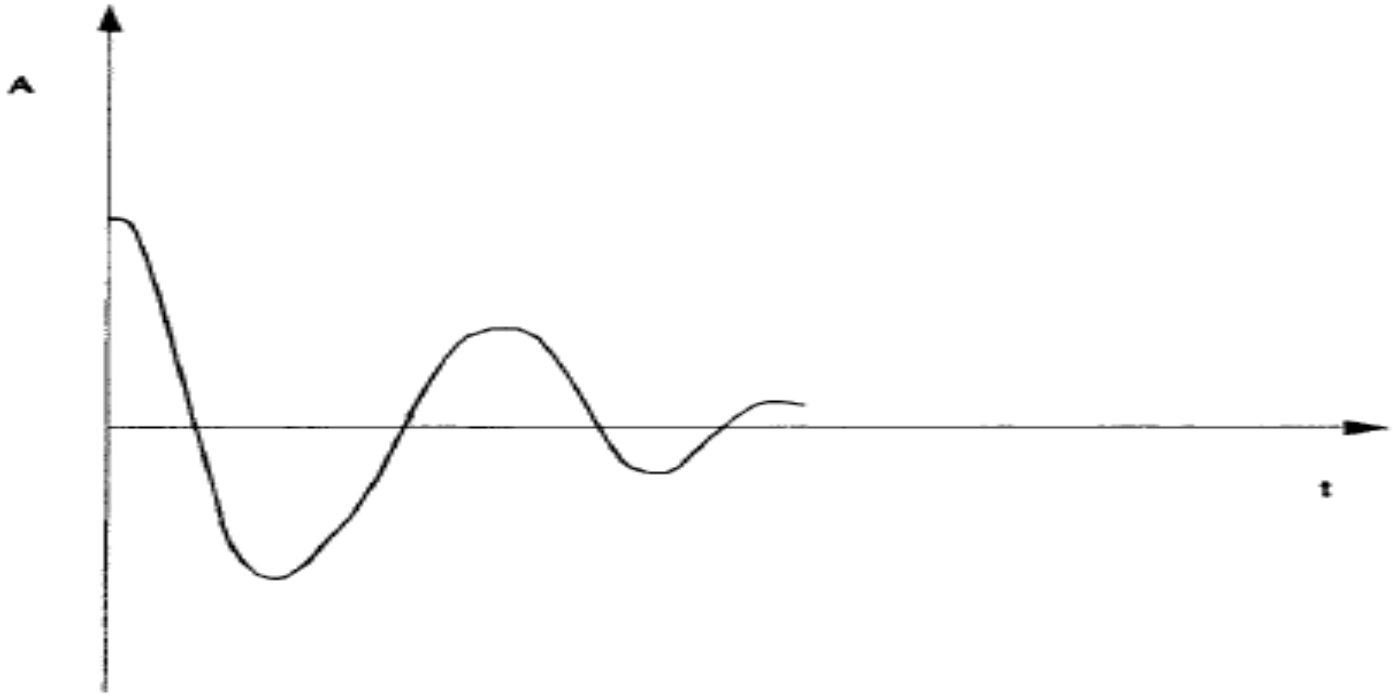

Damped free vibration response of a nonlinear system

Forced Vibrations

Consider an undamped linear single degree of freedom with a harmonic external excitation. The equation of motion of the system reads

$$x'' + \omega_n^2 x = \frac{P}{m} \cos \omega t$$

The amplitude of the permanent response is sketched in Fig. Notice that for P = 0, i.e., for free vibration, we will have a harmonic response with a frequency of response equal to the undamped natural frequency of the system.

Forced Vibrations

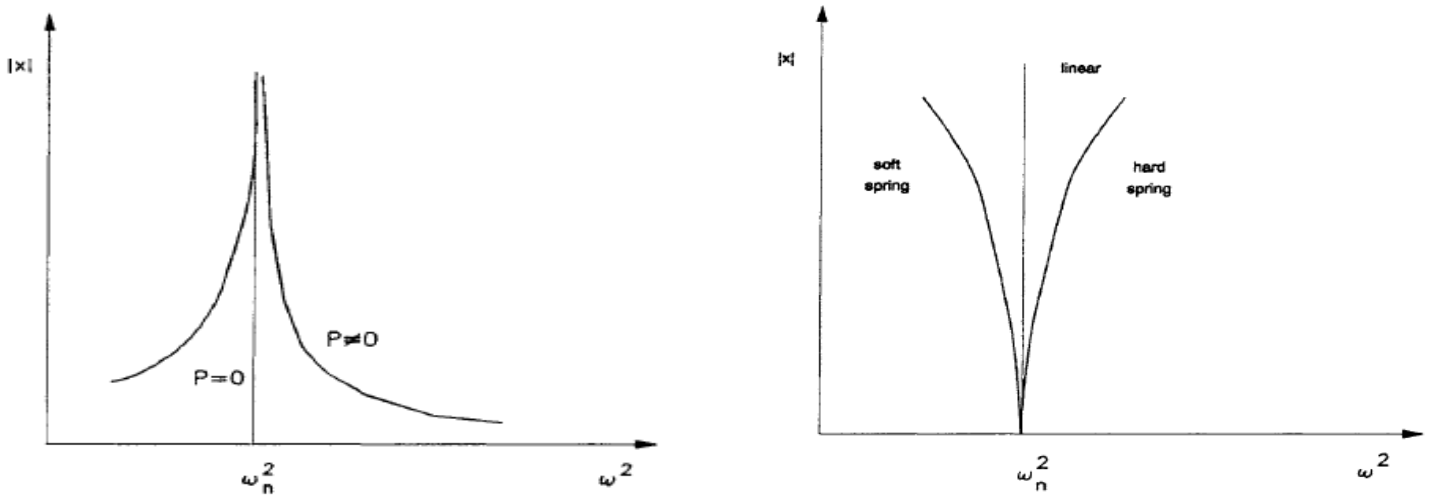

Free vibration response of linear and nonlinear systems

Permanent response amplitude of a linear undamped system due to harmonic external excitation.

The amplitude of the response when plotted against the frequency of excitation will have the form sketched in Fig. for soft and hard springs, respectively.

Exact Solutions

Solutions of the Equation of Motion of a Single-Degree-of-Freedom Nonlinear System

- Exact Solutions:

Very few nonlinear differential equations have exact solutions.

Exact mathematical solutions of nonlinear systems are studied not only because of their importance for the cases

where they exist but also because these exact solutions can be used in the studies of the performance and convergence of nonlinear numerical algorithm solvers that are to be used for the solution of the problems that do not have exact solutions.

Free vibration

Consider an undamped single-degree-of- freedom system with stiffness nonlinearity in free vibration.

The related equation of motion can be written as

$$x'' + \phi^2 f(x) = 0$$

Can be written as

$$\frac{d(x')^2}{dx} + 2\phi^2 f(x) = 0$$

Integrating, we obtain

$$(x')^2 = 2\phi^2 \int_x^X f(\xi)\, d\xi$$

Free vibration

We now consider the case when f (x) is given by

$$f(x) = x^n + \mu x^m \qquad m > n > 0$$

$$m = 3, 5, 7, \ldots \qquad n = 1, 3, 5, \ldots$$

We obtain

$$T = \frac{4}{\phi\sqrt{X^{n-1}}}\left[\sqrt{\frac{n+1}{2}}\int_0^1 \frac{\mathrm{d}u}{\sqrt{(1+\nu)-(u^{n+1}+\nu u^{m+1})}}\right]$$

Where

$$\nu = \mu X^{m-n}\left\{\frac{n+1}{m+1}\right\}$$

The extension to the case of a higher-order polynomial is straightforward.

Forced vibration

There is no exact solution for the general case of forced vibration of a nonlinear dynamic single-degree-of-freedom system.

The solutions are therefore obtained using numerical methods that will be discussed in the next section.

Multi degree-of-Freedom Nonlinear Systems

The step-by-step numerical integration methods given in previous chapter

Are otherwise directly extended for the analysis of arbitrary nonlinear systems with multiple degrees of freedom.

As in the linear case, the time-history response is divided into short,

normally equal time increments, and the response is calculated at the end of the time interval for a linearized system having properties determined at the beginning of the interval.

The system nonlinear properties

Are then modified at the end of the interval to conform to the state of deformations and stresses at that time.

The mass matrix is usually constant in most practical applications so that its inverse is evaluated once at the beginning of the solution procedure.

The stiffness and the damping matrices are modified at the beginning of each step. Therefore, during each step of the nonlinear solution A triangular decomposition of the equivalent stiffness matrix must be done to obtain the end displacements and velocities.

As in the linear case, the acceleration vectors are obtained solving the equations of motion at the beginning of the interval to avoid accumulation of errors during the solution procedure.

Introduction to random vibrations

Consider the record of a measured variable x (t),

which can represent for instance the displacement of a point in a structure as a function of time.

we can conclude that the variable x(t) is predominantly harmonic, while x(t) of Fig. is predominantly irregular.

Now if, in the process of Fig.la, during the repeated measurements of the records at each time,

we obtain a different angle of phase and if, in the process of Fig., the responses are different from each other during the repeated measurements, we call such processes random processes.

random vibrations

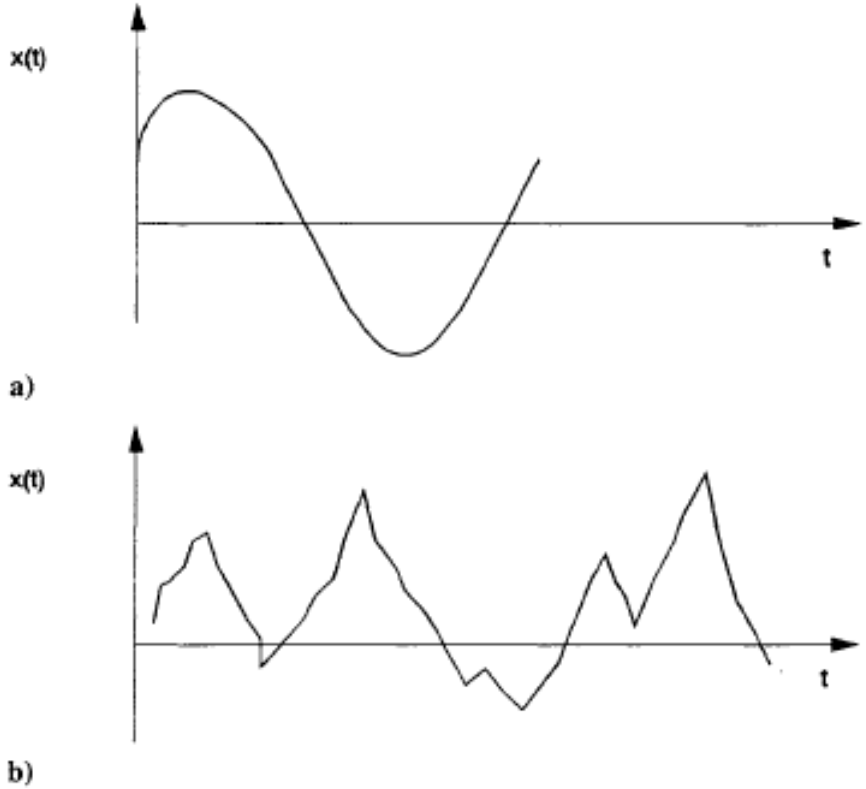

Record of a variable as a function of time

Classification of Random Processes

Stationary Random Processes:

Consider n records of a random variable as given in Fig.

We define the complete set of xk(t),k = 1 , 2 , . . . , n

as a random process, and each record of the set will be called a sample of the random process. Consider now the values of xk(t) for the instant of time t = t' we can write the mean value of the random process at that instant of time

Stationary Random Processes

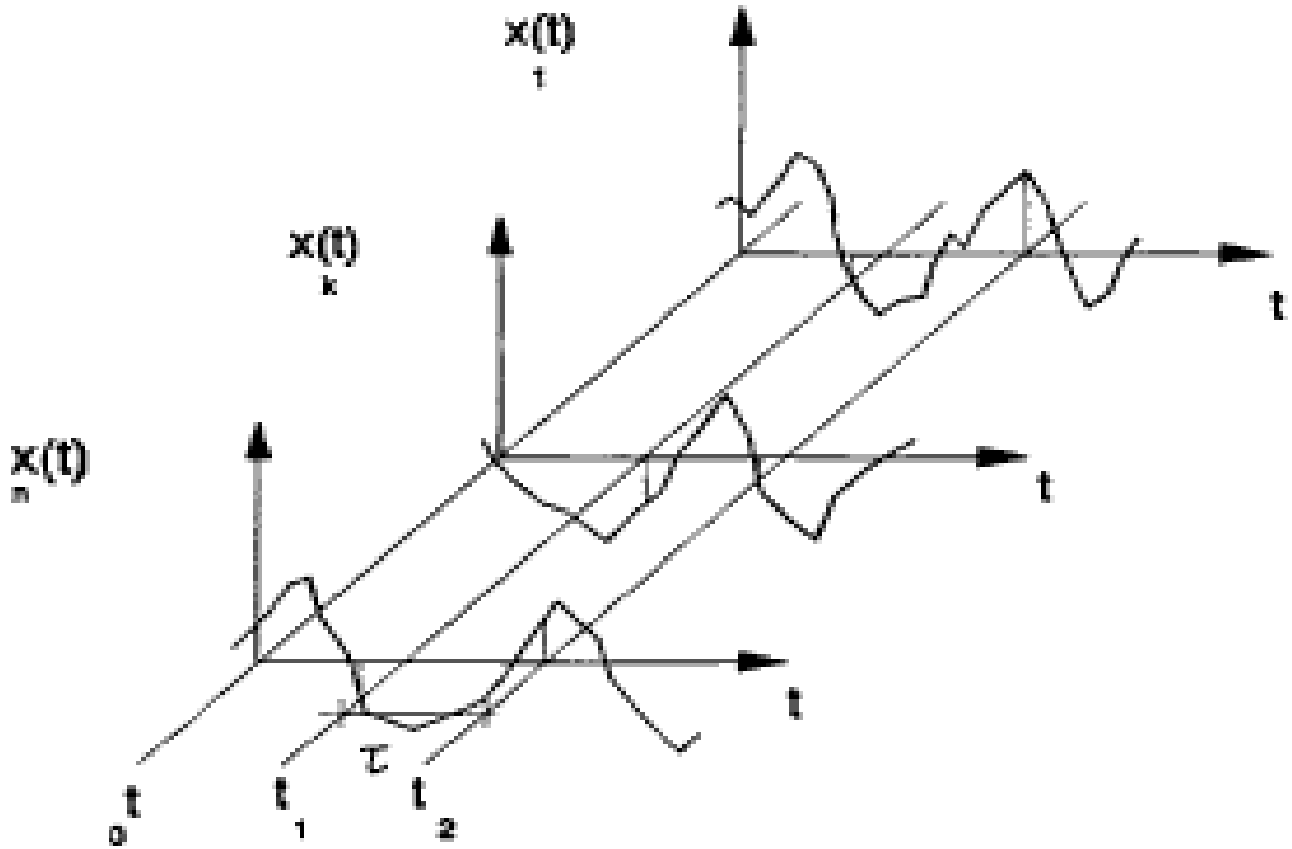

Time history of a random process

Probability Distribution and Density Functions

Consider a sample of an ergodic process as shown in Fig.

We define the probability distribution function as

$$P(x) = \text{Prob}\,[x(t) < x] = \lim_{T \to \infty} \frac{1}{T} \sum_i \Delta t_i$$

We will define the probability density function as

$$p(x) = \lim_{\Delta x \to 0} \frac{P(x + \Delta x) - P(x)}{\Delta x} = \frac{\mathrm{d}P(x)}{\mathrm{d}x}$$

$$P(x_1 < x < x_2) = \int_{x_1}^{x_2} p(x)\,\mathrm{d}x$$

We verify the following relations:

$$p(-\infty) = p(\infty) = 0$$

$$P(x) \geq 0$$

$$P(x) = \int_{-\infty}^{x} p(\xi)\,\mathrm{d}\xi$$

$$P(\infty) = \int_{-\infty}^{\infty} p(\xi)\,\mathrm{d}\xi = 1$$

Probability Distribution Functions

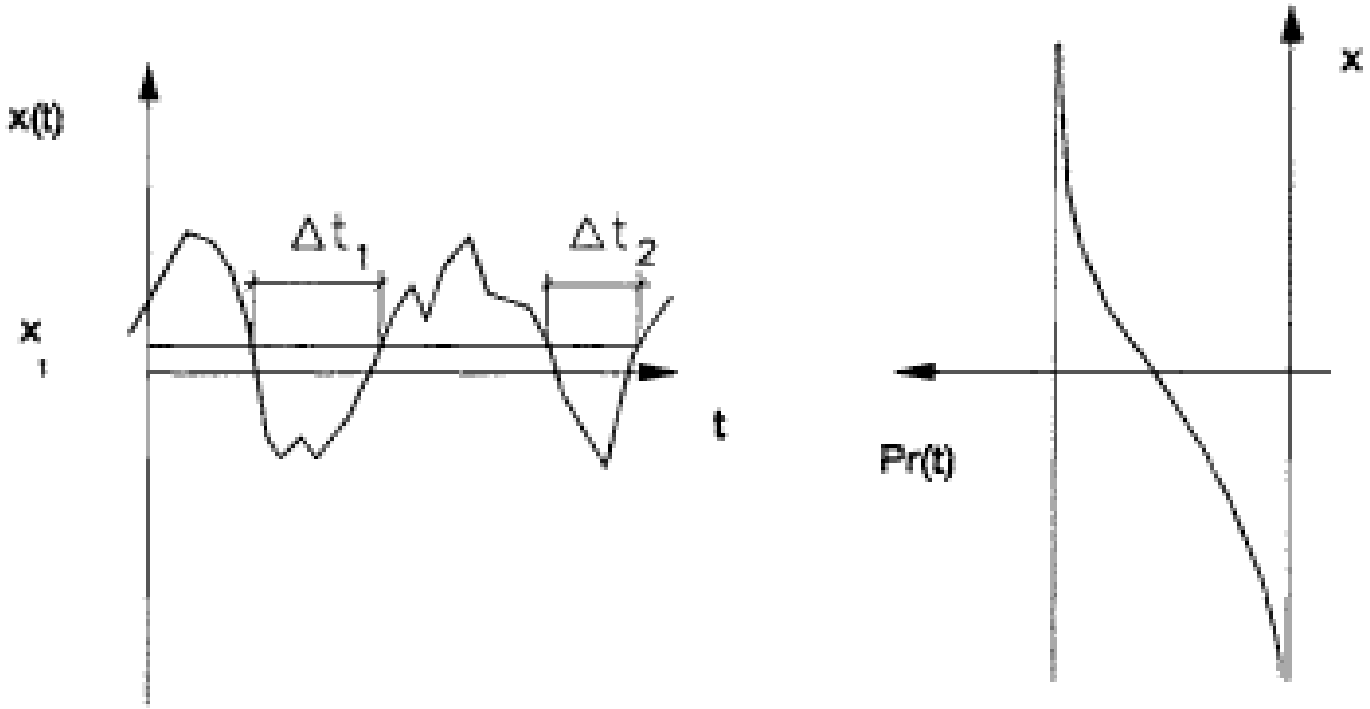

Probability distribution function

Description of the Mean Values in Terms of the Probability Density Function

Considering a stationary random process *(x(t)}* for a continuous function *g(x),* we can write the mean value *g(x)* as

$$\underline{g(x)} = \frac{1}{n}\sum_{1}^{n}{}_{n\to\infty} g(x) = \sum_{1}^{n}{}_{n\to\infty} g(x)\frac{1}{n}$$

We note that *{ l / n }* represents the probability of the process to have the value of g(x). Thus, we can write

$$\underline{g(x)} = \sum_{-\infty}^{\infty}{}_{\Delta x\to 0} g(x)p(x)\Delta x = \int_{-\infty}^{\infty} g(x)p(x)\,\mathrm{d}x$$

We call *g(x)* the mean value or the mathematical expectation, and we write

$$\underline{g(x)} = E[g(x)]$$

Description of the Mean Values in Terms of the Probability Density Function

Thus, we can write for the mean values the following expressions in terms of the probability density function:

For the mean value *g(x) = x,*

$$E[x] = \underline{x} = \int_{-\infty}^{\infty} x p(x)\,\mathrm{d}x$$

For the mean square value *g(x) = x2,*

$$E[x^2] = \underline{x}^2 = \int_{-\infty}^{\infty} x^2 p(x)\,\mathrm{d}x$$

For the variance *g(x) = (x — x)2,*

$$\sigma_x^2 = E[(x - \underline{x})^2] = \int_{-\infty}^{\infty} (x - \underline{x})^2 p(x)\,\mathrm{d}x$$

$$\underline{x}^2 - (\underline{x})^2 = E[x^2] - (E[x])^2$$

Properties of the Autocorrelation Function

The autocorrelation function for an ergodic process reads

$$R_x(\tau) = \lim_{T\to\infty} \frac{1}{T} \int_{-T/2}^{T/2} x(t)x(t+\tau)\,dt$$

Making the transformation $t - r = X$, we get

$$R_x(-\tau) = \lim_{T\to\infty} \frac{1}{T} \int_{-T/2-\tau}^{T/2-\tau} x(\lambda+\tau)x(\lambda)\,d\lambda$$

and because the integration is made for $T \to \infty$, we can write

$$R_x(-\tau) = \lim_{T\to\infty} \frac{1}{T} \int_{-T/2}^{T/2} x(\lambda+\tau)x(\lambda)\,d\lambda$$

$$= \lim_{T\to\infty} \frac{1}{T} \int_{-T/2}^{T/2} x(t+\tau)x(t)\,dt$$

Hence we conclude that the autocorrelation function is an even function.

Power Spectral Density Function

Consider the sample *f (t)* of an ergodic process and its autocorrelation function, which can be written as

$$R_f(\tau) = \lim_{T \to \infty} \frac{1}{T} \int_{-T/2}^{T/2} f(t) f(t+\tau)\, dt$$

This implies that the autocorrelation function is the inverse Fourier transform of *Sf(ω)*

$$R_f(\tau) = \frac{1}{2\pi} \int_{-\infty}^{\infty} S_f(\omega) e^{i\omega\tau}\, d\omega$$

Properties of the Power Spectral Density Function

1. The Power Spectral Density Function Is a Positive Function
2. The Power Spectral Density Function Is an Even Function
3. Representation of the Power Spectral Density Function in the Positive Domain
4. The power spectral density function provides the necessary information on the frequency decomposition of a random process.

White Noise and Narrow and Large Bandwidth

Now if the frequency decomposition is concentrated in turns of a peak frequency a)Q as shown in Fig.a, we call such distribution a narrow bandwidth distribution. where we have an equal frequency distribution in a large band, and we call such distribution a large bandwidth distribution. Now, if Sf(a>) is a constant for all the frequency decompositions, i.e., from -∞ to ∞ as shown in Fig.4c,
We define such distribution as white noise; this is in comparison with the white light distribution, which has a plain spectral distribution in the large visible band frequency.

In many practical cases, processes having distributions as shown in Fig.4d with an equal distribution in a large band of frequency can be considered as white noise distribution for practical purposes.

White Noise and Narrow and Large Bandwidth

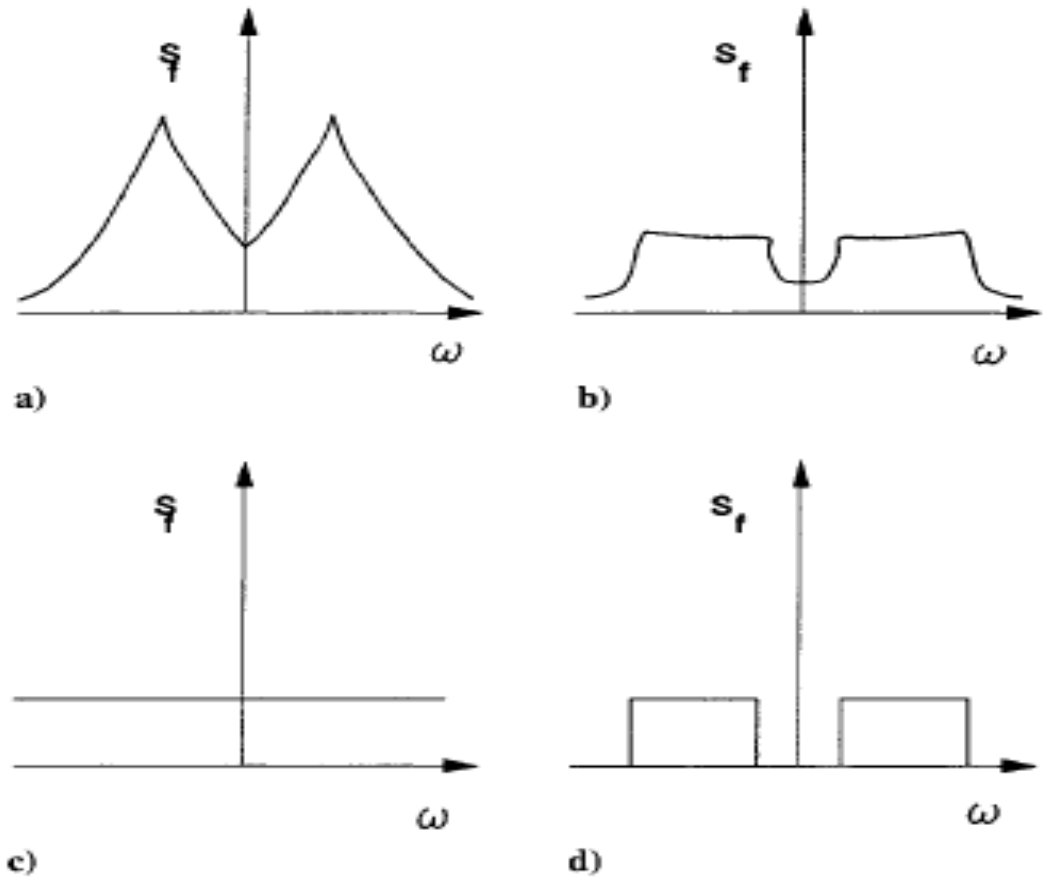

Narrow, large bandwidth and white noise distributions

Single-Degree-of-Freedom Response

The response *x(t)* of a linear single-degree-of-freedom system due to an external applied load *f(t)*,

whether a deterministic or random excitation, can be written in terms of Duhamel's convolution integral as

$$x(t) = \int_0^t f(t)h(t-\tau)\,\mathrm{d}\tau = \int_0^t f(t-\lambda)h(\lambda)\,\mathrm{d}\lambda$$

Now, for random excitation, we can extend the integration to —∞, and we write

$$x(t) = \int_{-\infty}^t f(t-\lambda)h(\lambda)\,\mathrm{d}\lambda$$

Single-Degree-of-Freedom Response

The Fourier transform of the response reads

$$X(\omega) = \int_{-\infty}^{\infty} x(t) e^{-i\omega t} \, dt$$

Considering now a random ergodic excitation *f (t)* to a single-degree-of- freedom mechanical system, we can write the mean value of the response as

$$\underline{x} = E[x(t)] = E \int_{-\infty}^{\infty} h(\lambda) f(t - \lambda) \, d\lambda$$

And, because the system is linear, we can invert the order of the mean and the integration operations to write

$$\underline{x} = E[x(t)] = \int_{-\infty}^{\infty} E[h(\lambda) f(t - \lambda) \, d\lambda]$$

Single-Degree-of-Freedom Response

In the sequel, we will calculate the autocorrelation function of the response to a single degree of freedom due to an ergodic external excitation.

$$x(t) = \int_{-\infty}^{\infty} f(\lambda_1) h(t - \lambda_1)\, d\lambda_1$$

Using Eq. we can write

$$x(t + \tau) = \int_{-\infty}^{\infty} f(\lambda_2) h(t + \tau - \lambda_2)\, d\lambda_2$$

Using the definition of the power spectral density function and Eq. we can write

$$S_x(\omega) = \int_{-\infty}^{\infty} R_x(\tau) e^{-i\omega\tau}\, d\tau$$

$$= \iint_{-\infty}^{\infty} e^{-i\omega\tau} [h(\lambda_1) h(\lambda_2) R_f(\tau + \lambda_1 - \lambda_2)\, d\lambda_1\, d\lambda_2]\, d\tau$$

We conclude that It represents an algebraic relation between three functions, is a very important relation in structural dynamics.

$$S_x(\omega) = |H(\omega)|^2 S_f(\omega)$$

Response to a White Noise

Consider a single-degree-of-freedom mechanical system subjected to an external random ergodic excitation having a power spectral density function given by a wh $S_f(\omega) = S_0$ h intensity so- Thus, we can write

Now, for a single-degree-of-freedom system, the complex frequency response function H(ω) reads

$$H(\omega) = \frac{1/k}{(1-\Omega^2) + 2i\gamma\Omega}$$

The autocorrelation function of the response can be obtained from the inverse Fourier transform of *Sx(a>)* and reads

Response to a White Noise

Integrating, we obtain

$$R_x(\tau) = \frac{1}{2\pi}\int_{-\infty}^{\infty} \frac{(1/k)^2 S_0 e^{i\omega\tau}\, d\omega}{[(1-\Omega^2)^2 + 4\gamma^2\Omega^2]}$$

$$= \frac{1}{\pi}\int_{0}^{\infty} \frac{(1/k)^2 S_0 e^{i\omega\tau}\, d\omega}{[(1-\Omega^2)^2 + 4\gamma^2\Omega^2]} \qquad \text{for } \tau \geq 0$$

$$R_x(\tau) = \frac{S_0\omega_n e^{-\gamma\omega_n\tau}}{4\gamma k^2}\left[\cos\omega_d\tau + \frac{\gamma}{(1-\gamma^2)^{\frac{1}{2}}}\sin\omega_d\tau\right] \qquad \text{for } \tau \geq 0$$

And the mean square value of the response reads

$$\psi_x^2 = R_x(0) = \frac{S_0\omega_n}{4\gamma k^2}$$

Introduction, transverse vibration of a string or cable, longitudinal vibration of a bar or rod, torsional vibration of shaft or rod, lateral vibration of beams, the Rayleigh-Ritz method.

UNIT - IV

CLOs	
CLO12	Understand the concept of autocorrelation function, power spectral density function, properties of the power spectral density function, white noise and narrow and large bandwidth
CLO13	Understand the concepts of transverse vibration of a string or cable
CLO14	Derive the equations longitudinal vibration of a bar or rod, torsional vibration of shaft or rod
CLO15	Solve the problems for lateral vibration of beams, and the Rayleigh-Ritz method.

Introduction

We have so far dealt with discrete systems where mass, damping, and elasticity were assumed to be present only at certain discrete points in the system.

In many cases, known as *distributed* or *continuous systems,* it is not possible to identify discrete masses, dampers, or springs.

We must then consider the continuous distribution of the mass, damping, and elasticity and assume that each of the infinite number of points of the system can vibrate.

This is why a continuous system is also called a *system of infinite degrees of freedom.*

Introduction

If a system is modeled as a discrete one, the governing equations are ordinary differential equations, which are relatively easy to solve.

On the other hand, if the system is modeled as a continuous one, the governing equations are partial differential equations, which are more difficult.

The information obtained from a discrete model of a system may not be as accurate as that obtained from a continuous model.

The choice between the two models must be made carefully, with due consideration of factors such as the purpose of the analysis.

The influence of the analysis on design, and the computational time available.

Introduction

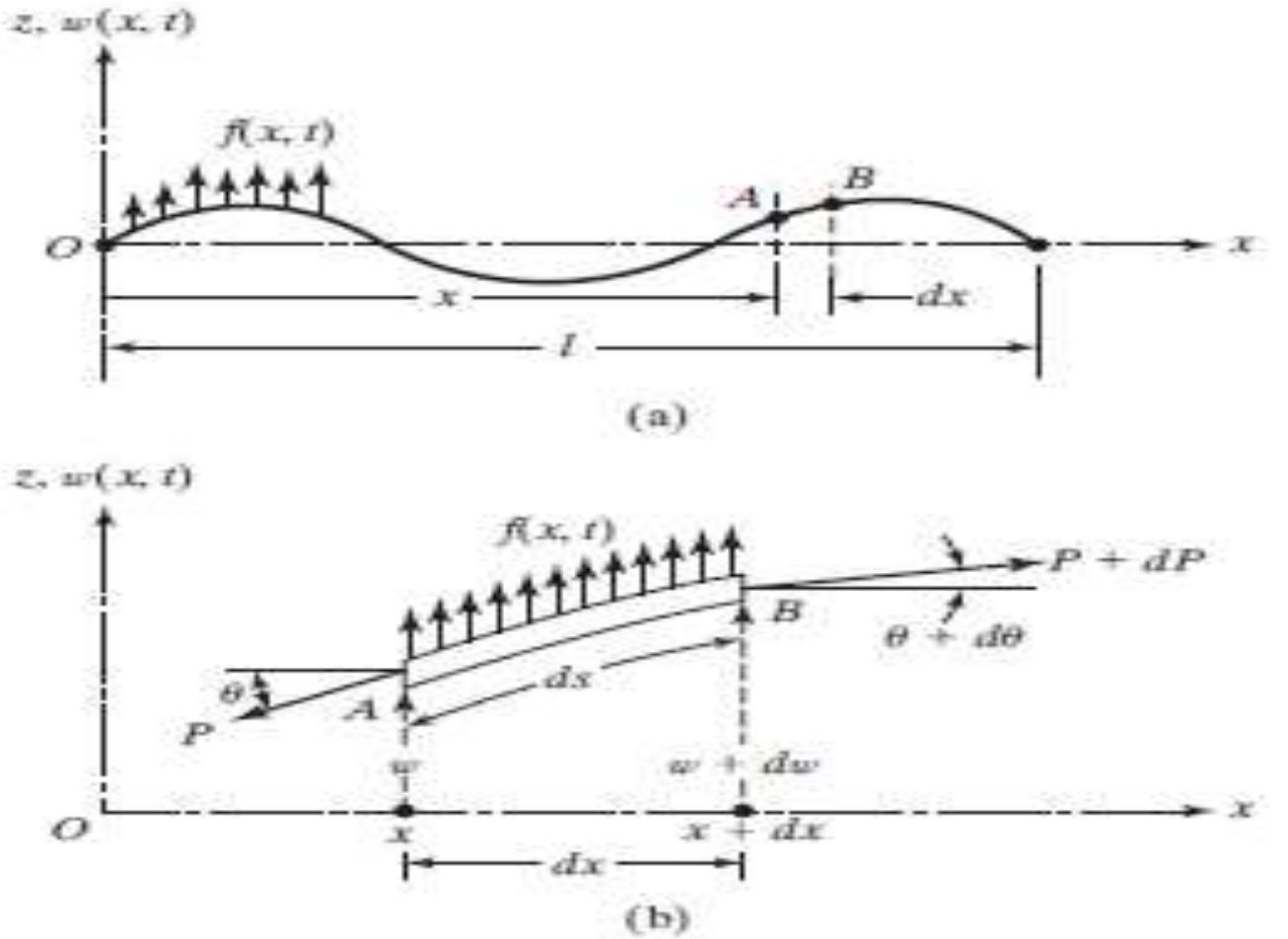

A vibrating string

Transverse Vibration of a String or Cable

Consider a tightly stretched elastic string or cable of length l subjected to a transverse force f(x, t) per unit length, as shown in Fig.(a). The transverse displacement of the string, w(x, t), is assumed to be small. Equilibrium of the forces in the z direction gives the net force acting on an element is equal to the inertia force acting on the element.

$$dP = \frac{\partial P}{\partial x} dx$$

For an elemental length dx $\sin\theta \simeq \tan\theta = \frac{\partial w}{\partial x}$

Hence the forced-vibration equation of the non uniform string, Equation, can be simplified to

$$\sin(\theta + d\theta) \simeq \tan(\theta + d\theta) = \frac{\partial w}{\partial x} + \frac{\partial^2 w}{\partial x^2} dx$$

Transverse Vibration of a String or Cable

$$\frac{\partial}{\partial x}\left[P\frac{\partial w(x,t)}{\partial x}\right] + f(x,t) = \rho(x)\frac{\partial^2 w(x,t)}{\partial t^2}$$

If the string is uniform and the tension is constant, Equation reduces to

$$P\frac{\partial^2 w(x,t)}{\partial x^2} + f(x,t) = \rho\frac{\partial^2 w(x,t)}{\partial t^2}$$

We obtain the free-vibration equation $P\frac{\partial^2 w(x,t)}{\partial x^2} = \rho\frac{\partial^2 w(x,t)}{\partial t^2}$

Or $c^2\frac{\partial^2 w}{\partial x^2} = \frac{\partial^2 w}{\partial t^2}$

Is also known as the wave equation.

Longitudinal Vibration of a Bar or Rod

Consider an elastic bar of length l with varying cross-sectional area A(x), The forces acting on the cross sections of a small element of the bar are given by P and P + dP with

$$P = \sigma A = EA\frac{\partial u}{\partial x}$$

Where σ is the axial stress, E is Young s modulus, u is the axial displacement, and du/dx is the axial strain.

If f(x, t) denotes the external force per unit length, the summation of the forces in the x direction gives the equation of motion

$$(P + dP) + f\,dx - P = \rho A\,dx\frac{\partial^2 u}{\partial t^2}$$

Longitudinal Vibration of a Bar or Rod

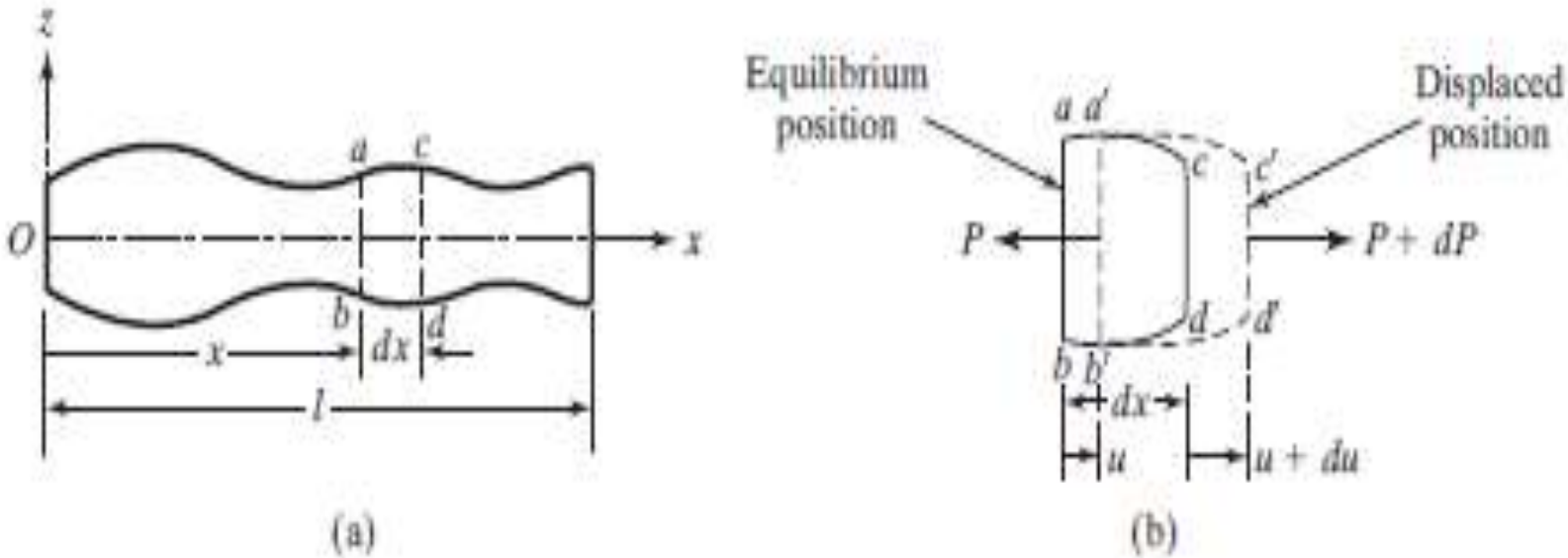

Longitudinal vibration of a bar

Longitudinal Vibration of a Bar or Rod

The equation of motion for the forced longitudinal vibration of a non uniform bar, Equation, can be expressed as

$$\frac{\partial}{\partial x}\left[EA(x)\frac{\partial u(x,t)}{\partial x}\right] + f(x,t) = \rho(x)A(x)\frac{\partial^2 u}{\partial t^2}(x,t)$$

For a uniform bar, Equation reduces to

$$EA\frac{\partial^2 u}{\partial x^2}(x,t) + f(x,t) = \rho A\frac{\partial^2 u}{\partial t^2}(x,t)$$

The free-vibration equation can be obtained from Equation, by setting f = 0, as

$$c^2\frac{\partial^2 u}{\partial x^2}(x,t) = \frac{\partial^2 u}{\partial t^2}(x,t)$$

Where $c = \sqrt{\frac{E}{\rho}}$

Torsional Vibration of a Shaft or Rod

Figure, represents a non uniform shaft subjected to an external torque f(x, t) per unit length. If u(x, t) denotes the angle of twist of the cross section, the relation between the torsional deflection and the twisting moment Mt(x, t) is given by

$$M_t(x,t) = GJ(x)\frac{\partial\theta}{\partial x}(x,t)$$

Where G is the shear modulus and GJ(x) is the torsional stiffness, with J(x) denoting the polar moment of inertia of the cross section in the case of a circular section.

If the mass polar moment of inertia of the shaft per unit length is the inertia torque acting on an element of length dx becomes

$$I_0\,dx\frac{\partial^2\theta}{\partial t^2}$$

Torsional Vibration of a Shaft or Rod

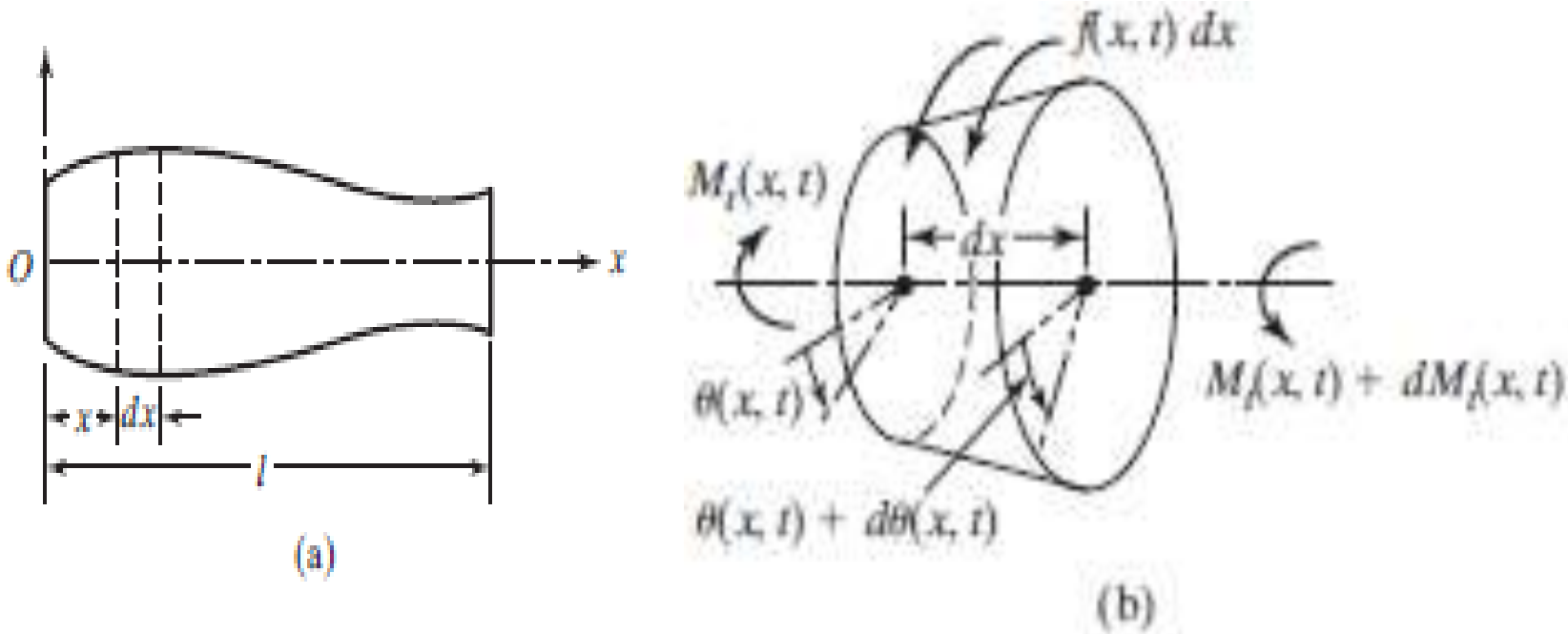

Torsional vibration of a shaft

Torsional Vibration of a Shaft or Rod

If an external torque f (x, t) acts on the shaft per unit length, the application of Newton second law yields the equation of motion:

$$(M_t + dM_t) + f\,dx - M_t = I_0\,dx\,\frac{\partial^2\theta}{\partial t^2} \qquad \frac{\partial M_t}{\partial x}dx$$

By expressing dMt as

The forced torsional vibration equation for a nonuniform shaft can be obtained For a uniform shaft, takes the form

$$\frac{\partial}{\partial x}\left[GJ(x)\frac{\partial\theta}{\partial x}(x,t)\right] + f(x,t) = I_0(x)\,\frac{\partial^2\theta}{\partial t^2}(x,t)$$

Which, in the case of free vibration, reduces to

$$c^2\frac{\partial^2\theta}{\partial x^2}(x,t) = \frac{\partial^2\theta}{\partial t^2}(x,t) \qquad GJ\frac{\partial^2\theta}{\partial x^2}(x,t) + f(x,t) = I_0\frac{\partial^2\theta}{\partial t^2}(x,t)$$

Where

$$c = \sqrt{\frac{GJ}{I_0}}$$

Lateral Vibration of Beams

Consider the free-body diagram of an element of a beam shown in Figure, where M(x, t) is the bending moment, V(x, t) is the shear force, and f(x, t) is the external force per unit length of the beam.

$$\rho A(x)\, dx \frac{\partial^2 w}{\partial t^2}(x, t)$$

Since the inertia force acting on the element of the beam is

$$-(V + dV) + f(x, t)\, dx + V = \rho A(x)\, dx \frac{\partial^2 w}{\partial t^2}(x, t)$$

The force equation of motion in the z direction gives

Where ρ is the mass density and A(x) is the cross-sectional area of the beam. The moment equation of motion about the y-axis passing through point O in Figure leads to

$$(M + dM) - (V + dV)\, dx + f(x, t)\, dx \frac{dx}{2} - M = 0$$

Lateral Vibration of Beams

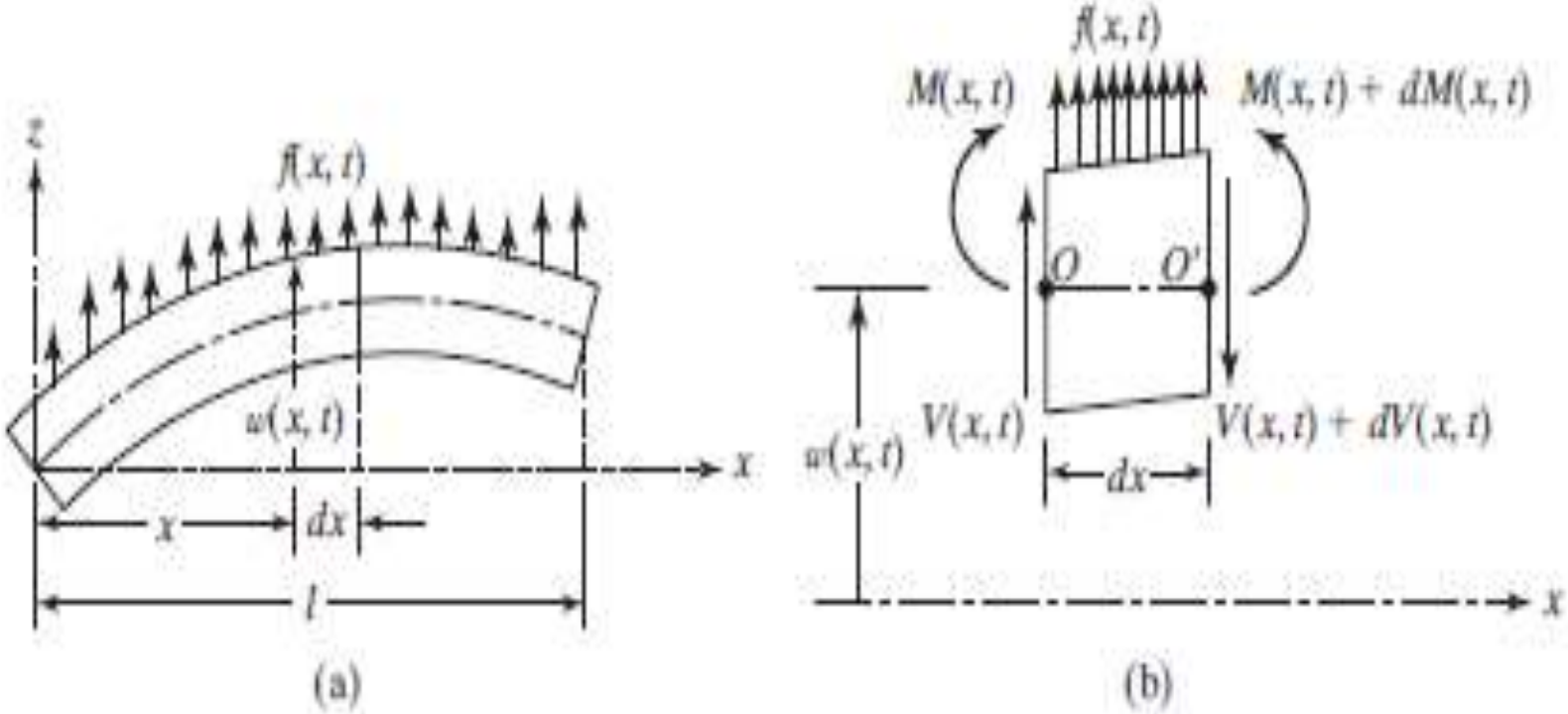

A beam in bending

Lateral Vibration of Beams

By writing

$$dV = \frac{\partial V}{\partial x} dx \quad \text{and} \quad dM = \frac{\partial M}{\partial x} dx$$

By using the relation V = dM/dx

$$-\frac{\partial^2 M}{\partial x^2}(x, t) + f(x, t) = \rho A(x) \frac{\partial^2 w}{\partial t^2}(x, t)$$

From the elementary theory of bending of beams (also known as the Euler-Bernoulli or thin beam theory), the relationship between bending moment and deflection can be expressed as

$$M(x, t) = EI(x) \frac{\partial^2 w}{\partial x^2}(x, t)$$

Lateral Vibration of Beams

Where E is Young s modulus and I(x) is the moment of inertia of the beam cross section about the y-axis.

We obtain the equation of motion for the forced lateral vibration of a non-uniform beam:

$$\frac{\partial^2}{\partial x^2}\left[EI(x)\frac{\partial^2 w}{\partial x^2}(x,t)\right] + \rho A(x)\frac{\partial^2 w}{\partial t^2}(x,t) = f(x,t)$$

Reduces to

$$EI\frac{\partial^4 w}{\partial x^4}(x,t) + \rho A\frac{\partial^2 w}{\partial t^2}(x,t) = f(x,t)$$

For free vibration, f(x, t) = 0, and so the equation of motion becomes

$$c^2\frac{\partial^4 w}{\partial x^4}(x,t) + \frac{\partial^2 w}{\partial t^2}(x,t) = 0$$

Where

$$c = \sqrt{\frac{EI}{\rho A}}$$

Rayleigh s Method

Rayleigh s method can be applied to find the fundamental natural frequency of continuous systems.

This method is much simpler than exact analysis for systems with varying distributions of mass and stiffness.

Although the method is applicable to all continuous systems, we shall apply it only to beams in this section.4 Consider the beam shown in Figure.

In order to apply Rayleigh s method, we need to derive expressions for the maximum kinetic and potential energies and Rayleigh s quotient.

The kinetic energy of the beam can be expressed as

$$T = \frac{1}{2}\int_0^l \dot{w}^2\, dm = \frac{1}{2}\int_0^l \dot{w}^2 \rho A(x)\, dx$$

Rayleigh s Method

The maximum kinetic energy can be found by assuming a harmonic variation w(x, t) = W(x) cos vt:

$$T_{max} = \frac{\omega^2}{2}\int_0^l \rho A(x) W^2(x)\, dx$$

The potential energy of the beam V is the same as the work done in deforming the beam. By disregarding the work done by the shear forces, we have

$$V = \frac{1}{2}\int_0^l M\, d\theta$$

Can be rewritten as

$$V = \frac{1}{2}\int_0^l \left(EI\frac{\partial^2 w}{\partial x^2}\right)\frac{\partial^2 w}{\partial x^2}\, dx = \frac{1}{2}\int_0^l EI\left(\frac{\partial^2 w}{\partial x^2}\right)^2 dx$$

Since the maximum value of w(x, t) is W(x), the maximum value of V is given by

$$V_{max} = \frac{1}{2}\int_0^l EI(x)\left(\frac{d^2W(x)}{dx^2}\right)^2 dx$$

Rayleigh s Method

By equating Tmax to Vmax, we obtain Rayleigh s quotient:

$$R(\omega) = \omega^2 = \frac{\int_0^l EI\left(\frac{d^2W(x)}{dx^2}\right)^2 dx}{\int_0^l \rho A(W(x))^2\, dx}$$

For a stepped beam, can be more conveniently written as

$$R(\omega) = \omega^2$$

$$= \frac{E_1 I_1 \int_0^{l_1}\left(\frac{d^2W}{dx^2}\right)^2 dx + E_2 I_2 \int_{l_1}^{l_2}\left(\frac{d^2W}{dx^2}\right)^2 dx + \cdots}{\rho A_1 \int_0^{l_1} W^2\, dx + \rho A_2 \int_{l_1}^{l_2} W^2\, dx + \cdots}$$

here and correspond t Ei, Ii, Ai, li o the ith step (i = 1, 2, Á).

The Rayleigh-Ritz Method

The Rayleigh-Ritz method can be considered an extension of Rayleigh s method.

It is based on the premise that a closer approximation to the exact natural mode can be obtained by superposing a number of assumed functions than by using a single assumed function, as in Rayleighs method.

If the assumed functions are suitably chosen, this method provides not only the approximate value of the fundamental frequency but also the approximate values of the higher natural frequencies and the mode shapes.

The Rayleigh-Ritz Method

An arbitrary number of functions can be used, and the number of frequencies that can be obtained is equal to the number of functions used.

A large number of functions, although it involves more computational work, leads to more accurate results.
In the case of transverse vibration of beams, if n functions are chosen for approximating the deflection W(x), we can write

$$W(x) = c_1 w_1(x) + c_2 w_2(x) + \cdots + c_n w_n(x)$$

The Rayleigh-Ritz Method

Where w1(x), w2(x), Á , wn(x) are known linearly independent functions of the spatial coordinate x,

which satisfy all the boundary conditions of the problem, and c1, c2, Á , cn are coefficients to be found.

To make the natural frequency stationary, we set each of the partial derivatives equal to zero and obtain

$$\frac{\partial(\omega^2)}{\partial c_i} = 0, \qquad i = 1, 2, \ldots, n$$

Collar's aeroelastic triangle, static aeroelasticity phenomena, dynamic aeroelasticity phenomena, aeroelastic problems at transonic speeds, aeroelastic tailoring, active flutter suppression. Effect of aeroelasticity in flight vehicle design.

UNIT - V

CLOs	
CLO16	Understand the concepts of Collar's aeroelastic triangle, static aeroelasticity phenomena
CLO17	Understand the concept of dynamic aeroelasticity phenomena
CLO18	Calculate the aero elastic problems at transonic speeds, aero elastic tailoring, active flutter suppression. Effect of aero elasticity in flight vehicle design.

Introduction

Aeroelasticity is a notably new branch of applied mechanics that studies the interaction between fluid matters and flexible solid bodies.

The typical application of aeroelasticity is in the branch of aircraft engineering. However, aeroelastic issues are applicable also for civil engineering (e.g., slender buildings, towers, smokestacks, suspension bridges, electric lines, and pipelines) or transportation engineering (cars, ships, submarines).

Also important are its applications in machine engineering (compressors, turbines).

Introduction

Two factors drive aviation development:

1) the quest for speed; and,
2) the competition for new air vehicle military and commercial applications.

These factors trigger the appearance of new aircraftft shapes, devices and materials, as well as applications of new technologies such as avionics.

These factors have created and continue to create new challenges for the engineering discipline known as aeroelasticity.

Introduction

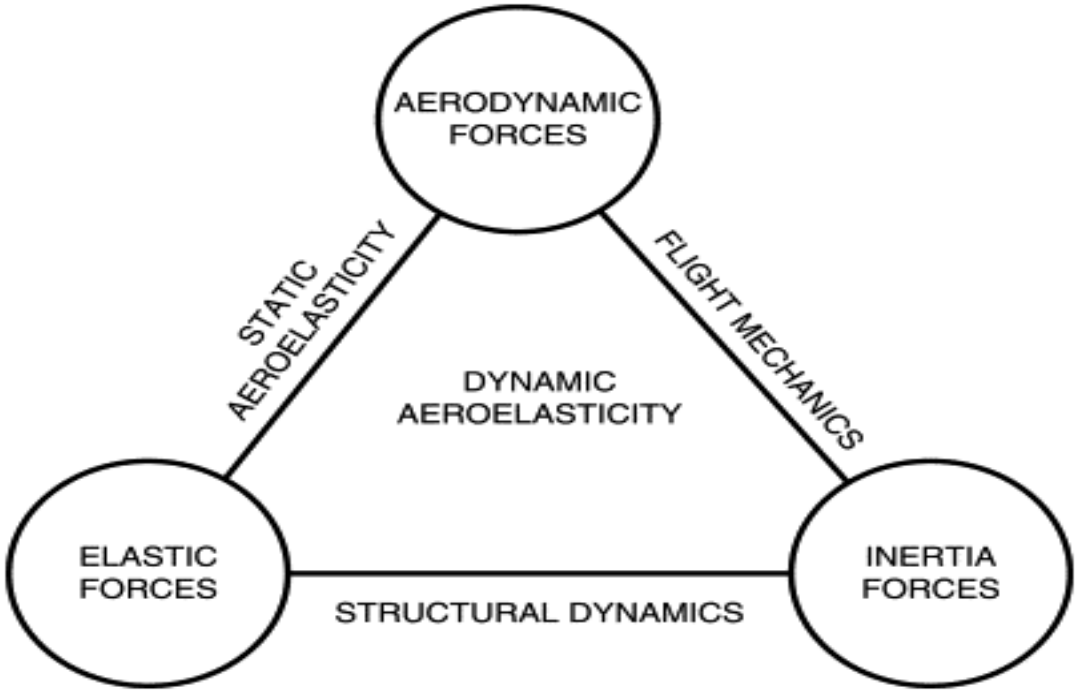

Three-ring aeroelastic interaction Venn diagram.

Collar's aero elastic triangle

Aeroelastic phenomena may be divided according to the diagrammed definition of aeroelasticity (Collar's triangle of forces – Figure).

The sides of the triangle represent the relationships among the particular pairs of forces representing specific areas of mechanics, including aeroelasticity,

whereas the triangle's interior represents the interference of all three groups of forces typical for dynamic aeroelastic phenomena.

Static aeroelastic phenomena that exclude inertial forces are characterized by the unidirectional deformation of the structure, whereas dynamic aeroelastic phenomena that include inertial forces are typical in their oscillatory property of structure deformation.

Collar's triangle of forces

Problems with aeroelasticity have been occurring since the birth of aviation.

The first famous event caused by an aeroelastic phenomenon was the crash of Langley's monoplane

which occurred only eight days before the Wright brothers' first successful flight.

Thus, the Wrights became famous as the first fliers and Langley is only remarked in aeroelastic textbooks.

The cause of the crash was the torsional divergence of the wing with low torsional stiffness.

Collar's triangle of forces

The early stage of aviation is characterized by biplanes that allow for the design of a torsionally stiffer structure.

At this time, torsional divergence was the dominant aeroelastic phenomenon. Torsional divergence was also the cause of several crashes of Fokker's high-wing monoplane D-8.

The low stiffness of the fuselage and tail planes, as well as the unsuitable design of the control system,

caused the crashes of the British Handley-Page O/400 twin-engine biplane bomber and the DH-9 biplane fighter during the First World War.

Collar's triangle of forces

Aeroelastic interactions determine airplane loads and influence flight performance in four primary areas:

1) wing and tail surface lift redistribution that change external loads from preliminary loads computed on rigid surfaces;
2) stability derivatives, including lift effectiveness, that affects flight static and dynamic control features such as aircraft trim and dynamic response;
3) control effectiveness, including aileron reversal, that limits maneuverability;
4) aircraft structural dynamic response to atmospheric turbulence and buffeting, as well as structural stability, in particular flutter.

Collar's triangle of forces

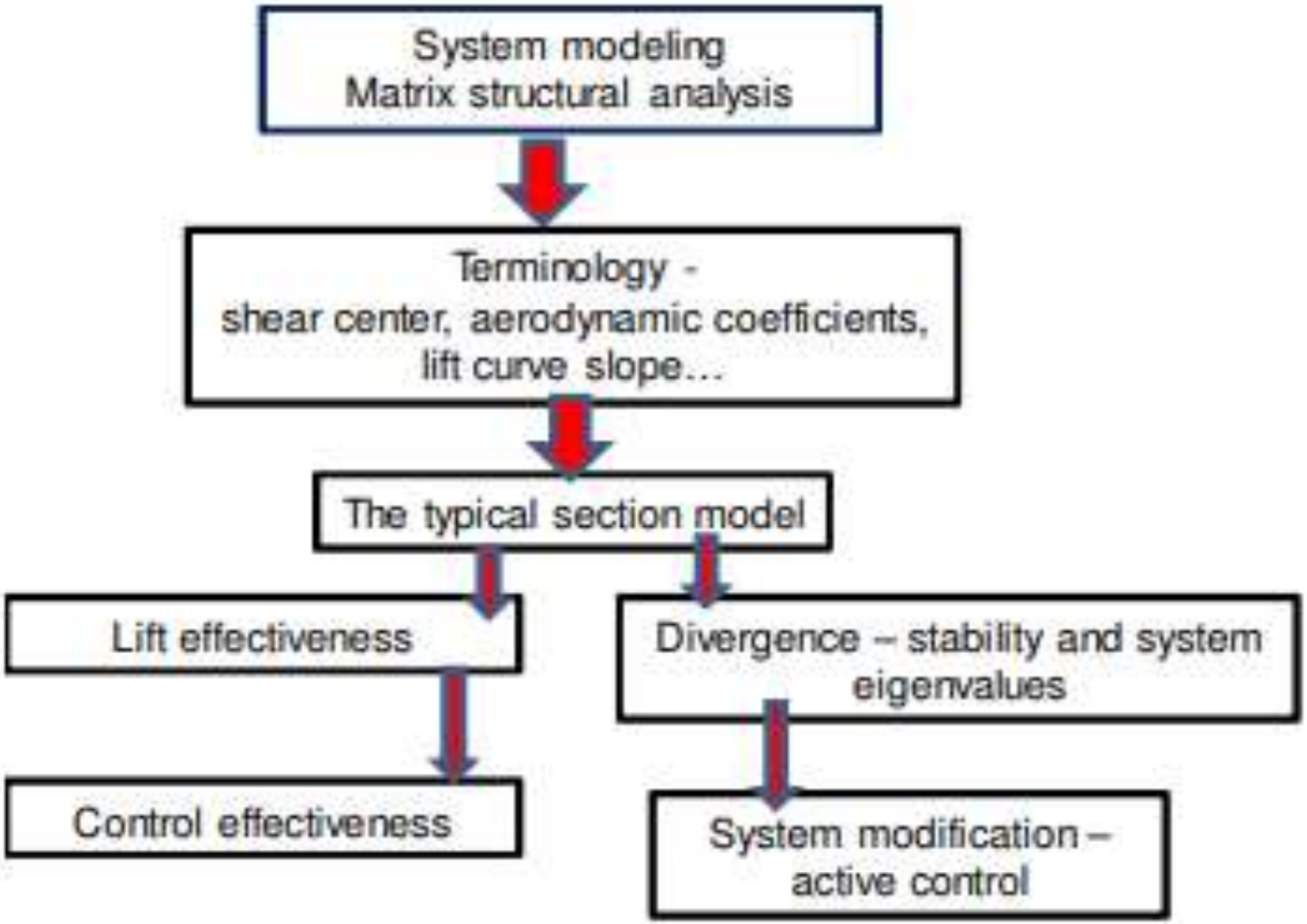

DEFINITIONS

Aero elasticity:

1. Aeroelastic problems would not exist if airplane structures where perfectly rigid.
2. Many important aeroelastic phenomena involve inertia forces as well as aerodynamic and elastic forces.

Static Aeroelasticity: Science which studies the mutual interaction between aerodynamic forces and elastic forces, and the influence of this interaction on airplane design.

Dynamic Aeroelasticity: Phenomena involving interactions of inertial, aerodynamic, and elastic forces.

Collar diagram

Describes the aeroelastic phenomena by means of a triangle of forces

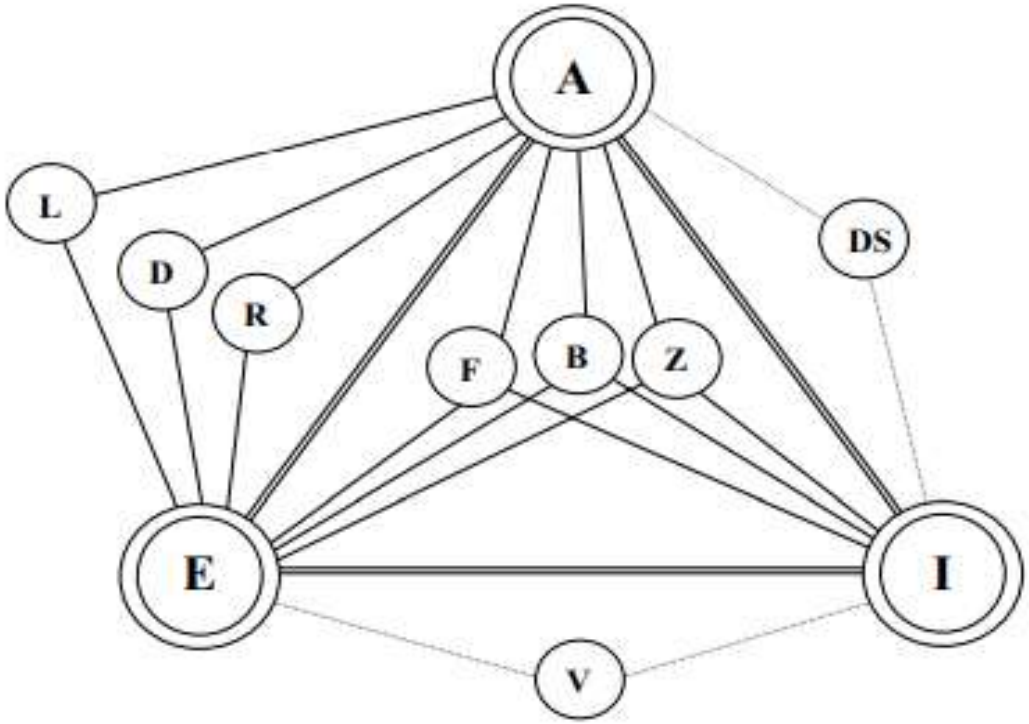

A – Aeroelastic force
E – Elastic force
I – Inertial force

DYNAMIC AEROELASTICITY

Phenomena involving all three types of forces:

1. F – Flutter: dynamic instability occurring for aircraft in flight at a speed called flutter speed

2. B – Buffeting: transient vibrations of aircraft structural components due to aerodynamic impulses produced by wake behind wings, nacelles, fuselage pods, or other components of the airplane

3. Z – Dynamic response: transient response of aircraft structural components produced by rapidly applied loads due to gusts, landing, gun reactions, abrupt control motions, and moving shock waves

STATIC AEROELASTICITY

Phenomena involving only elastic and aerodynamic forces:

1. L – Load distribution: influence of elastic deformations of the structure on the distribution of aerodynamic pressures over the structure

2. D – Divergence: a static instability of a lifting surface of an aircraftft in flight, at a speed called the divergence speed, where elasticity of the lifting surface plays an essential role in the instability.

3. R – Control system reversal: A condition occurring in flight, at a speed called the control reversal speed, at which the intended effect of displacing a given component of the control system are completely nullified by elastic deformations of the structure.

The structures enterprise and its relation to aero elasticity

Every aircraft company has a large engineering division with a name such as “Structures Technology.”

The purpose of the structures organization is to create an airplane flight structure with structural integrity.

This organization also has the responsibility for determining and fulfilling structural design objectives and structural certification of production aircraft.

Structural design requirements

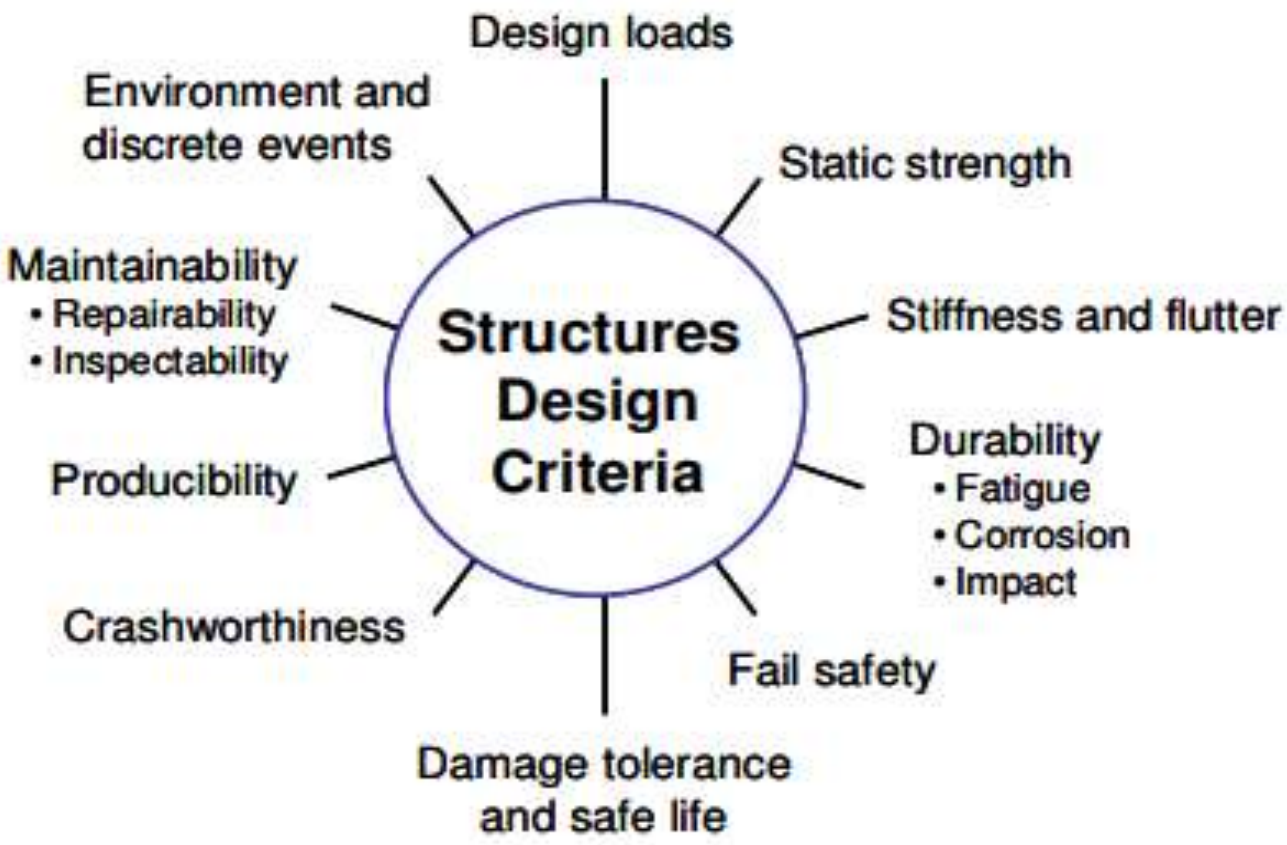

Structural design requirements

Structural design requirements

Beginning at the top of the “wheel” we have design loads.
These loads include airframe loads encountered during landing and take-off, launch and deployment as well as in-flight loads and other operational loadings. There are thousands of such “load sets.” Once these load sets are identified, there are at least nine design criteria that must be taken into account.
On the wheel in Figure stiffness and flutter are one important set of criteria that must be addressed. The traditional airframe design and development process can be viewed as six interconnected blocks, shown in Figure.
Initial estimates of aircraft component weights use empirical data gathered from past experience. On the other hand, if the designs considered at this early stage have radical new forms, these estimates may be in error; but these errors will only be discovered later.

Static aero elasticity phenomena

All structures deform when external loads are applied although the deflections may be barely discernible.

From an analysis perspective this means we can compute the internal loads and the external deflections independently.
These structural analysis problems are called statically determinate and include structural stability problems such as column buckling.

Both loads and deflections must be determined simultaneously.

This load/deflection interaction is represented graphically by the Venn diagram

In Figure in which the overlapping orange area represents the statically indeterminate problem area.

Static aero elasticity phenomena

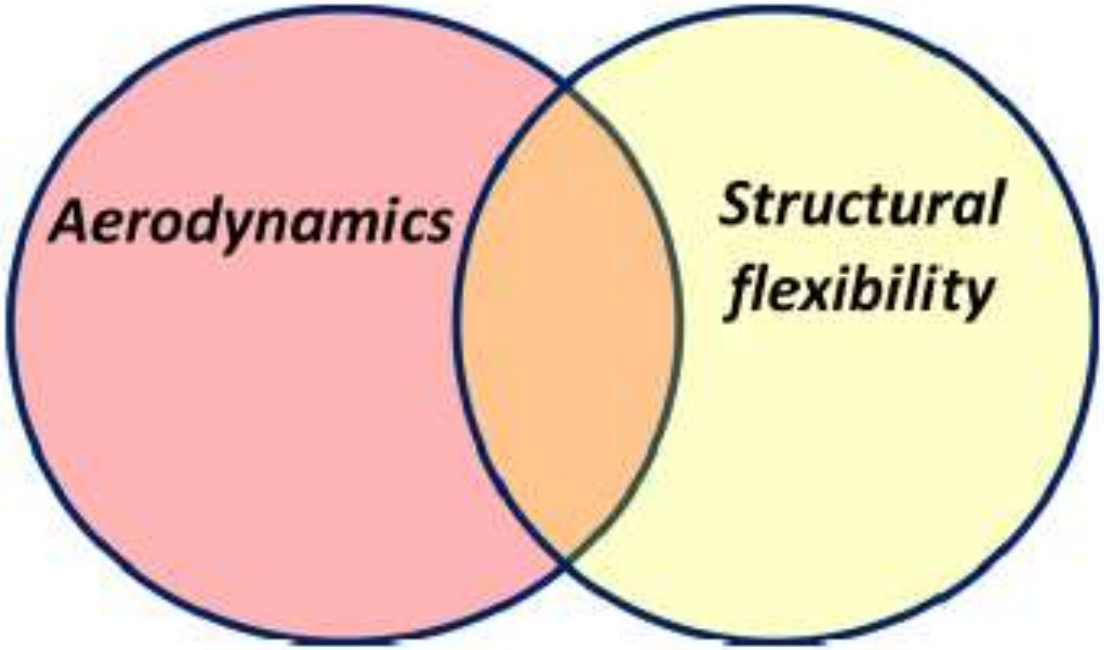

Static aeroelasticity encompasses problems involving the intersection between steady-state aerodynamic and structural deformation interactions.

STRUCTURAL DESIGN REQUIREMENTS

Every aircraft company has a large engineering division with a name such as “Structures Technology.”

The purpose of the structures organization is to create an airplane flight structure.

Structural integrity

Has the responsibility for determining and fulfilling structural design objectives and *structural certification* of production aircraft.

In addition, the organization conducts research and develops or identifies new materials, techniques and information that will lead to new aircraft or improvements in existing aircraft.

structural design and development process

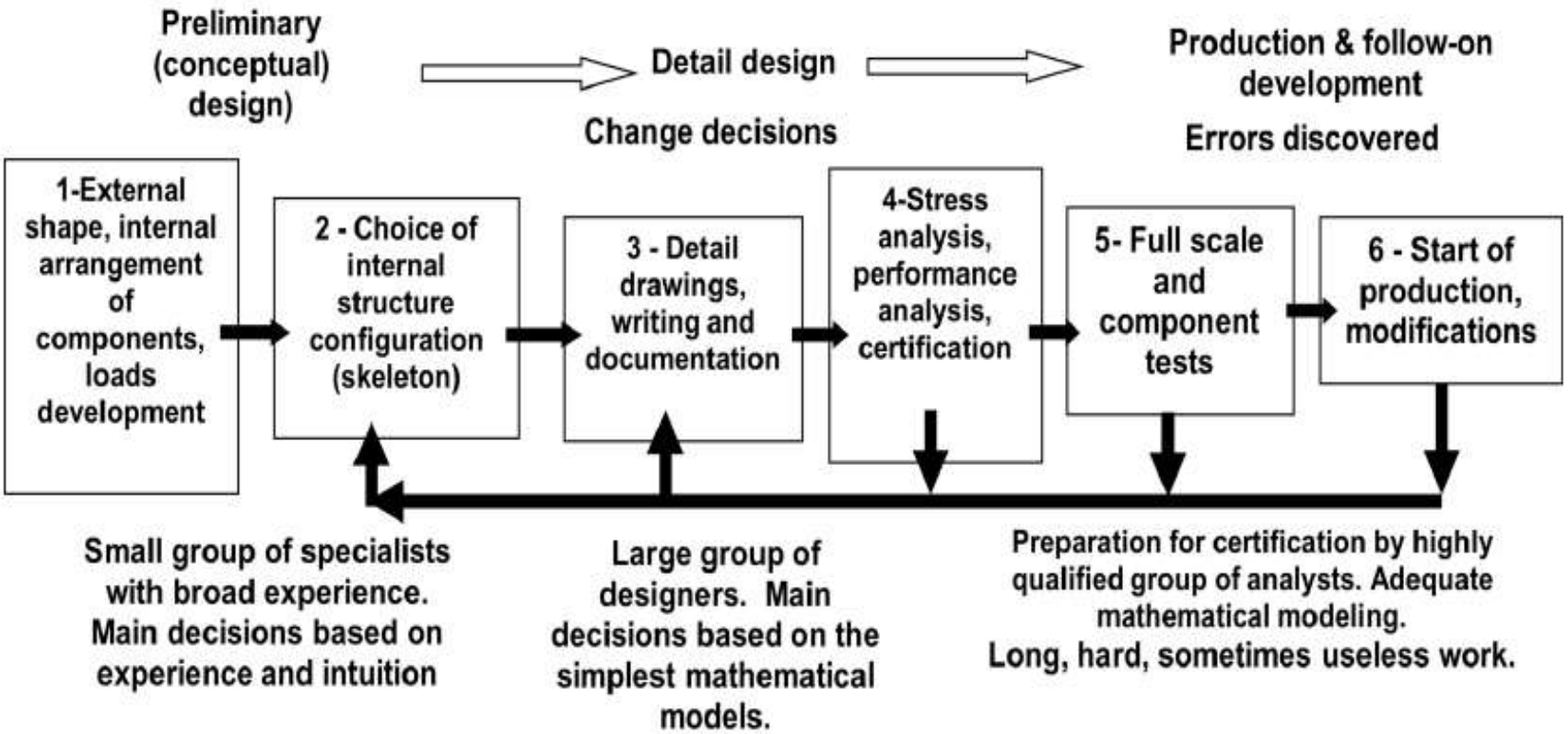

The structural design and development process requires testing, analysis and feedback

structural design and development process

Modern aircraft are increasingly designed to be highly maneuverable in order to achieve high-performance mission objectives.

Toward this goal, aircraft designers have been adopting light-weight, flexible, high aspect ratio wings in modern aircraft.

Aircraft design concepts that take advantage of wing flexibility to increase maneuverability have been investigated

structural design and development process

By twisting a wing structure, an aerodynamic moment can be generated to enable an aircraft to execute a maneuver in place of the use of traditional control surfaces.

For example, a rolling moment can be induced by twisting the left and right wings in the opposite direction.

Similarly, a pitching moment can be generated by twisting both wings in the same direction.

Wing twisting or warping for flight control is not a new concept and was used in the Wright Flyer in the 1903.

structural design and development process

The U.S. Air Force conducted the Active Flexible Wing program in the 1980's and 1990's to explore potential use of leading edge slats and trailing edge flaps

To increase control effectiveness of F-16 aircraft for high speed maneuvers.

In the recent years, the Active Aeroelastic Wing research program also investigated a similar technology

To induce wing twist in order to improve roll maneuverability of F/A-18 aircraft.

structural design and development process

Structural deflections of lifting surfaces interact with aerodynamic forces to create aeroelastic coupling that can affect aircraft performance.

Understanding these effects can improve the prediction of aircraft flight dynamics and can provide insight into how to design a flight control system that can reduce aeroelastic interactions with a rigid-body flight controller.

Generally, high aspect ratio lifting surfaces undergo a greater degree of structural deflections than low aspect ratio lifting surfaces.

structural design and development process

In general, a wing section possesses a lower stiffness than a horizontal stabilizer or a vertical stabilizer.

As a result, its natural frequency is normally present inside a flight control frequency bandwidth that potentially can result in flight control interactions.

For example, when a pilot commands a roll maneuver, the aileron deflections can cause one or more elastic modes of the wings to excite.

The wing elastic modes can result in changes to the intended aerodynamics of the wings, thereby potentially causing undesired aircraft responses.

Aero-servoelastic filtering

Is a traditional method for suppressing elastic modes, but this usually comes at an expense in terms of reducing the phase margin in a flight control system.

If the phase margin is significantly reduced, aircraft responses may become more sluggish to pilot commands.

Consequently, with a phase lag in the control inputs, potential pilot induced oscillations (PIOs) can occur.

Numerous studies have been made to increase the understanding of the role of aero-servoelasticity in the design of flight control systems.

Aero-servoelastic filtering

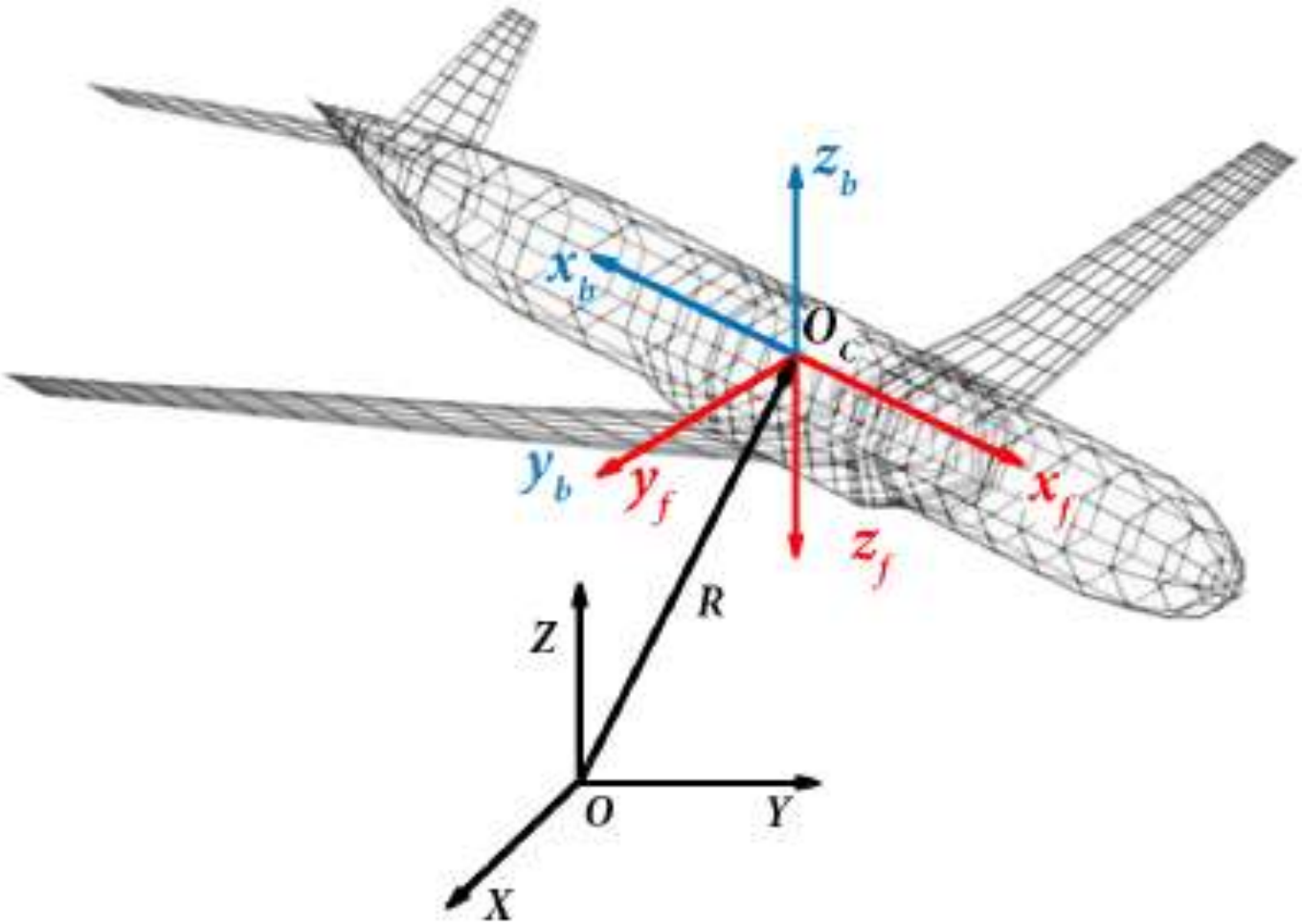

TRANSONIC FLUTTER

Aeroelasticity is the study of aerodynamic, elastic, and inertial forces on a body in a fluid flow.

Flutter is an aeroelastic phenomenon where these forces start exciting each other, leading to instability in the structure.

In an aircraft wing, this results in large cyclic bending and twisting motions of the wing, likely leading to structural failure of the wing.

The onset of flutter, therefore, has to be avoided at all times and rigorous flight testing procedures are in place to ensure that flutter does not occur within an aircraft's operational envelope.

TRANSONIC FLUTTER

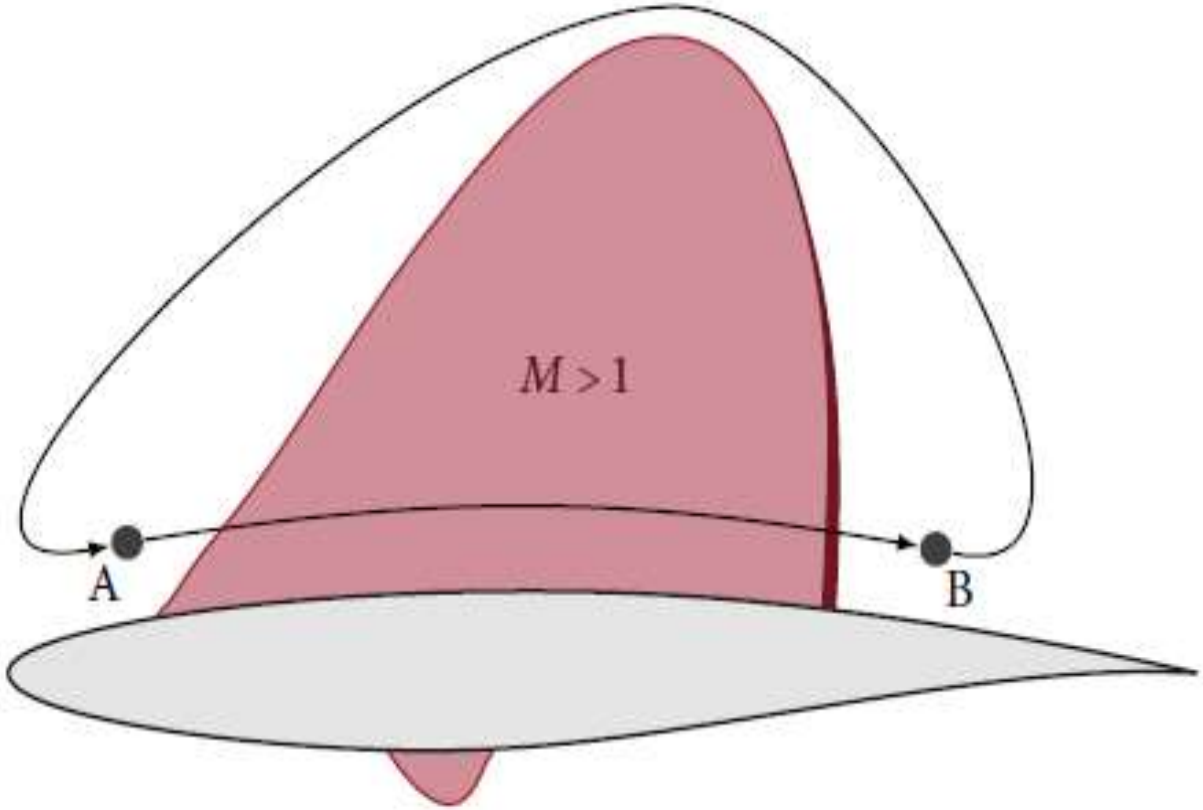

Information travel for airfoil in transonic flow.
The path from B to A is much longer than from A to B.

Transonic flutter boundary

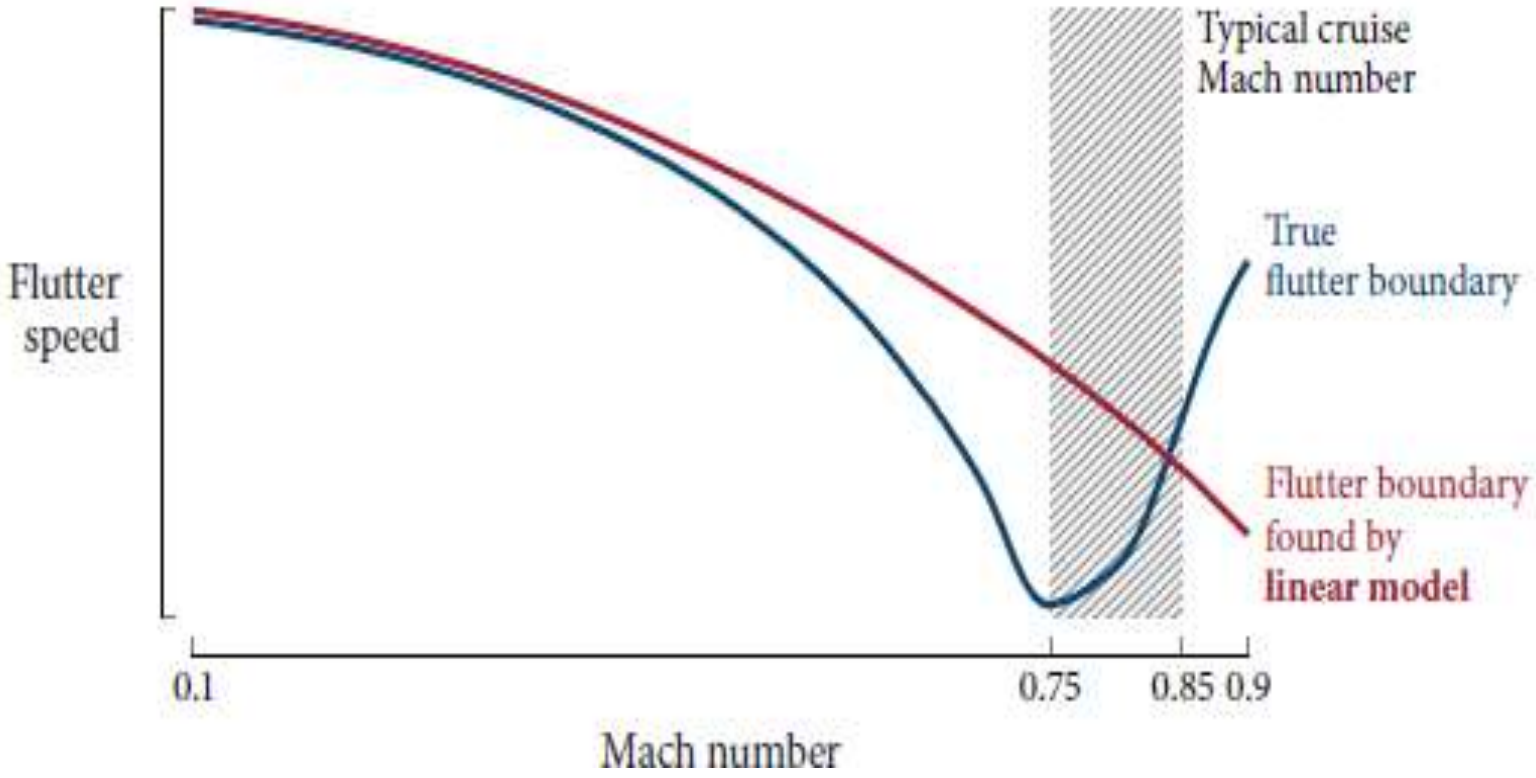

Transonic flutter boundary with typical transonic dip, which linear theory cannot predict.

Aero elastic tailoring

Novel manufacturing techniques open up additional design space for aerospace vehicles.

High aspect ratio wings in novel aircraft concepts, for example, over the benefits of higher aerodynamic efficiency,

but present the challenge of being more susceptible to aero elastic problems such as flutter.

Active flutter suppression

1. Wing flutter model aerodynamic model:

Three of the most common methods to predict unsteady loads on an aircraft are strip theory (2D unsteady airfoil theory with 3D corrections), the doublet-lattice method, and the unsteady vortex-lattice method (uvlm).

Considering that our goal is to investigate aircraft concepts with high aspect ratios, the use of strip theory here is appropriate.

Active flutter suppression

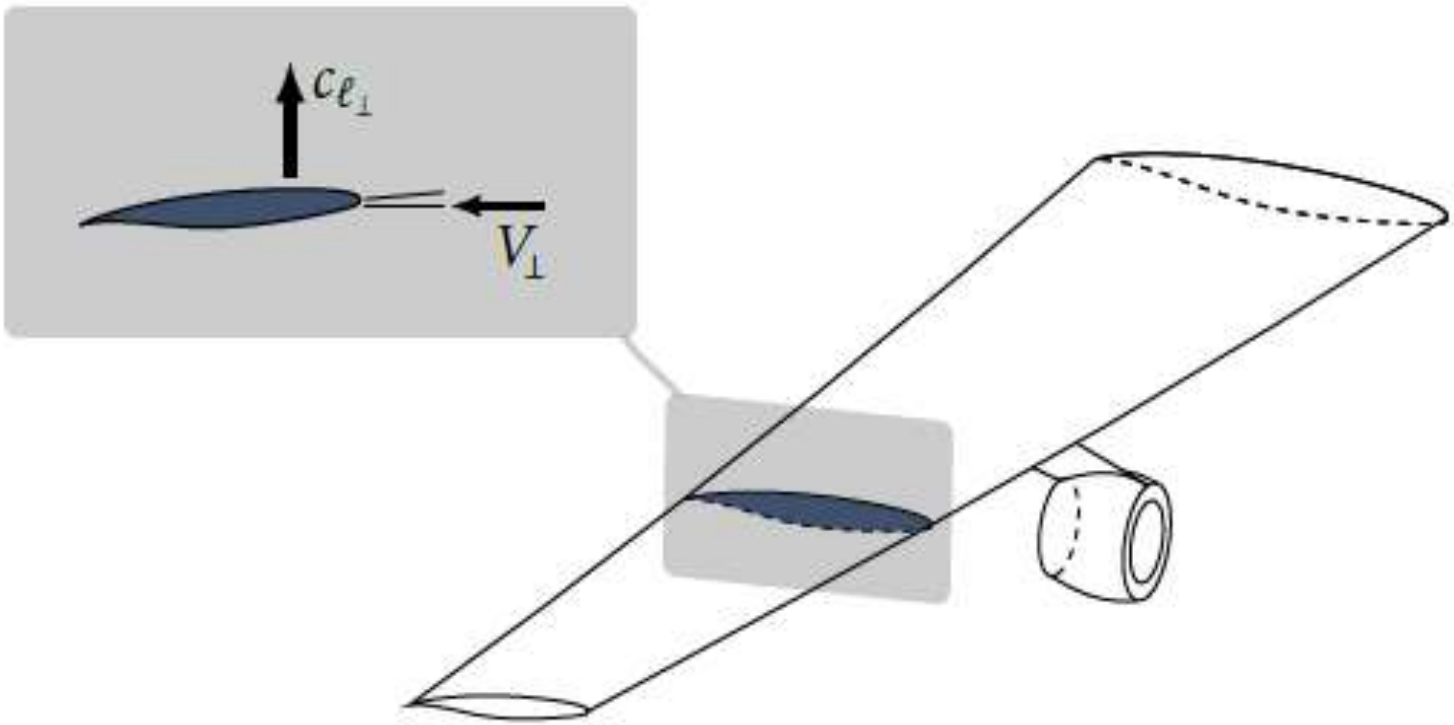

In strip theory, one assumes that the flow is two dimensional in cuts perpendicular to the span.

Active flutter suppression

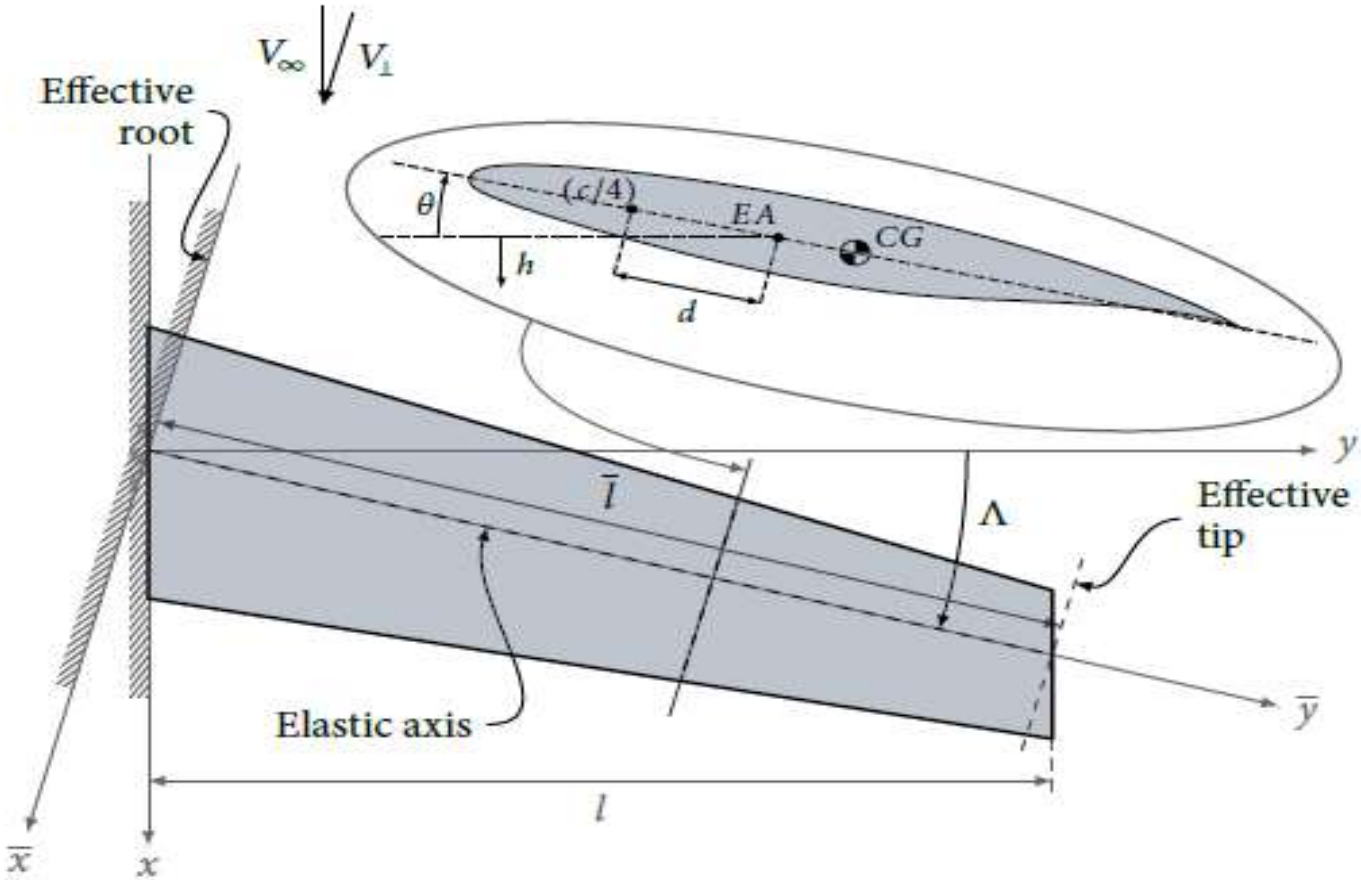

Swept wing considered in model

1. Structural model:

For the structural part of the model, we use Bernoulli-Euler beam theory.

The beam equations are,

$$m(\bar{y})\Delta\ddot{h}(\bar{y},t) + S_{\bar{y}}(\bar{y})\Delta\ddot{\theta}(\bar{y},t) + \frac{\partial^2}{\partial\bar{y}^2}\left[EI(\bar{y})\frac{\partial^2\Delta h(\bar{y},t)}{\partial\bar{y}^2}\right] = -\Delta L(\bar{y},t)$$

$$I_{\bar{y}}(\bar{y})\Delta\ddot{\theta}(\bar{y},t) + S_{\bar{y}}(y)\Delta\ddot{h}(\bar{y},t) - \frac{\partial}{\partial\bar{y}}\left[GJ(\bar{y})\frac{\partial\Delta\theta(\bar{y},t)}{\partial\bar{y}}\right] = \Delta M_{ea}(\bar{y},t)$$

The appropriate boundary conditions here are,

$$\Delta h(0,t) = 0, \quad \frac{\partial\Delta h}{\partial\bar{y}}(0,t) = 0, \quad \frac{\partial^2\Delta h}{\partial\bar{y}^2}(\bar{l},t) = 0, \quad \frac{\partial^3\Delta h}{\partial\bar{y}^3}(\bar{l},t) = 0,$$

$$\Delta\theta(0,t) = 0, \quad \frac{\partial\Delta\theta}{\partial\bar{y}}(\bar{l},t) = 0.$$

Structural model

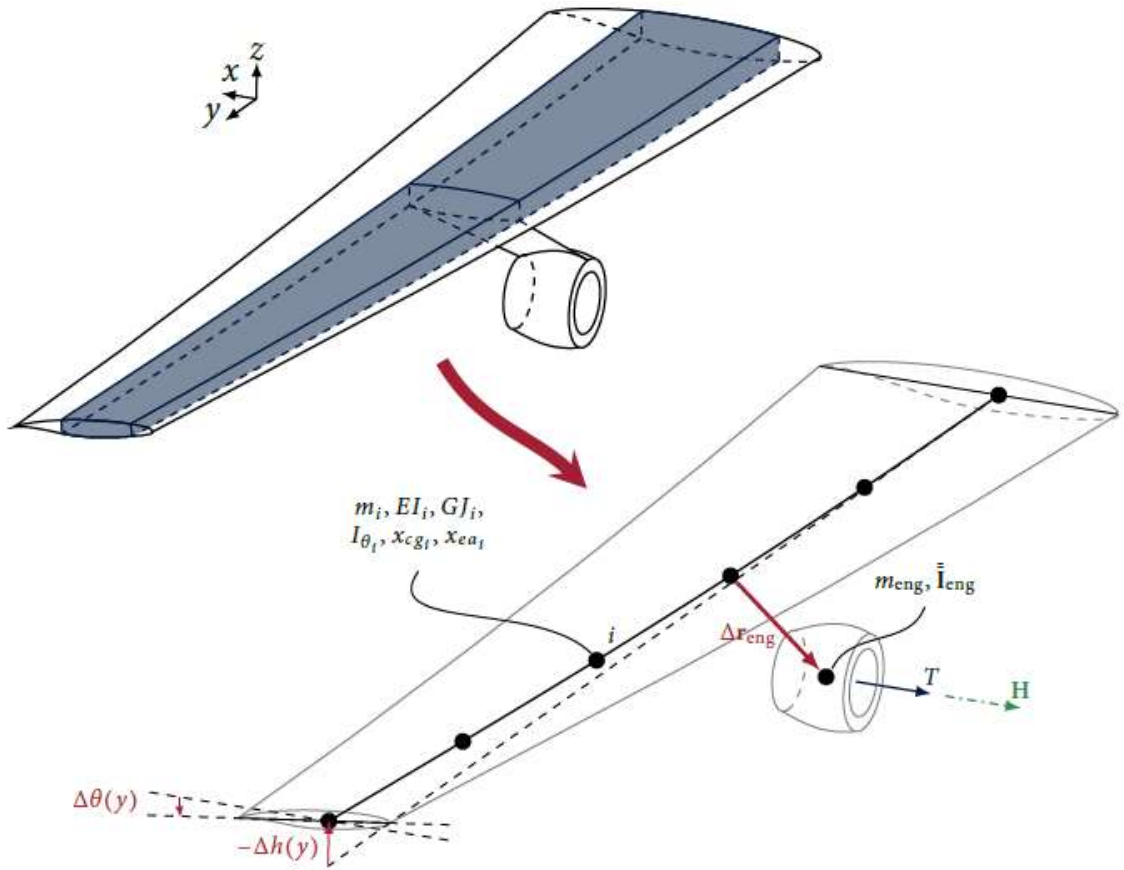

Discretized beam model used in structural part of the flutter model.

Structural model

The beam equations can be rewritten as

$$m(\bar{y})\Delta\ddot{h}(\bar{y},t) - S_{\bar{y}}(\bar{y})\Delta\ddot{\theta}(\bar{y},t) + \frac{\partial\Delta\mathcal{S}(\bar{y},t)}{\partial\bar{y}} = -\Delta L(\bar{y},t)$$

$$I_{\bar{y}}(\bar{y})\Delta\ddot{\theta}(\bar{y},t) + S_{\bar{y}}(y)\Delta\ddot{h}(\bar{y},t) - \frac{\partial\Delta\mathcal{T}(\bar{y},t)}{\partial\bar{y}} = \Delta M_{ea}(\bar{y},t)$$

Where

$$\frac{\partial\Delta\mathcal{M}}{\partial\bar{y}} = \Delta\mathcal{S}, \quad \frac{\partial\Delta y}{\partial\bar{y}} = \frac{\Delta\mathcal{M}}{EI}, \quad \frac{\partial\Delta h}{\partial\bar{y}} = \Delta y, \quad \frac{\partial\Delta\theta}{\partial\bar{y}} = \frac{\Delta\mathcal{T}}{GJ},$$

With boundary conditions

$$\Delta h(0,t) = 0, \quad \Delta y(0,t) = 0, \quad \Delta\mathcal{M}(\bar{l},t) = 0, \quad \Delta\mathcal{S}(\bar{l},t) = 0,$$
$$\Delta\theta(0,t) = 0, \quad \Delta\mathcal{T}(\bar{l},t) = 0,$$

Effect of aero elasticity in flight vehicle design

STRUCTURAL ANALYSIS:

i. Supersonic Wing Characteristics:

The present work utilizes a wing platform with an aspect ratio of 5 and taper ratio of 0.5.

The wing leading edge swept back angle is 30°.

The airfoil of this supersonic wing is a double wedge shape as shown in Fig.

Effect of aero elasticity in flight vehicle design

The wedge angle of the airfoil is 10°. Along the wing span, the airfoil is divided into three parts which are the main wing box and two control surfaces at the leading and trailing edge.

The portions of the leading and trailing edge have been specified as 15% and 20% of the chord length, respectively.

The performance of the selected airfoil uses the characteristics provided by for higher supersonic region analysis.

The present wing design is used as a baseline for further work where the wing geometry as well as wing composite structure is set as the sensitivity parameter to obtain an optimum supersonic wing design.

Effect of aero elasticity in flight vehicle design

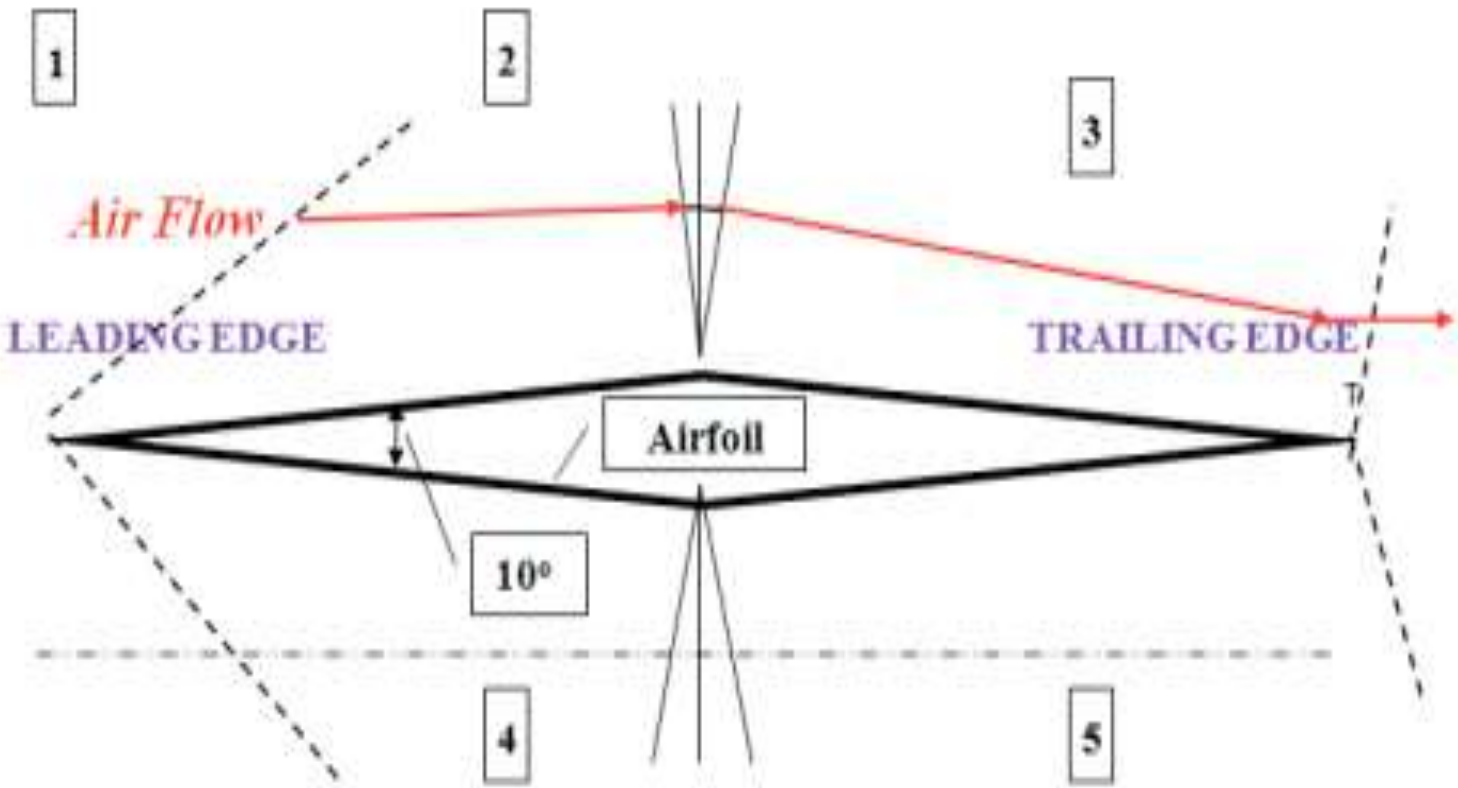

Double wedge airfoil

Effect of aero elasticity in flight vehicle design

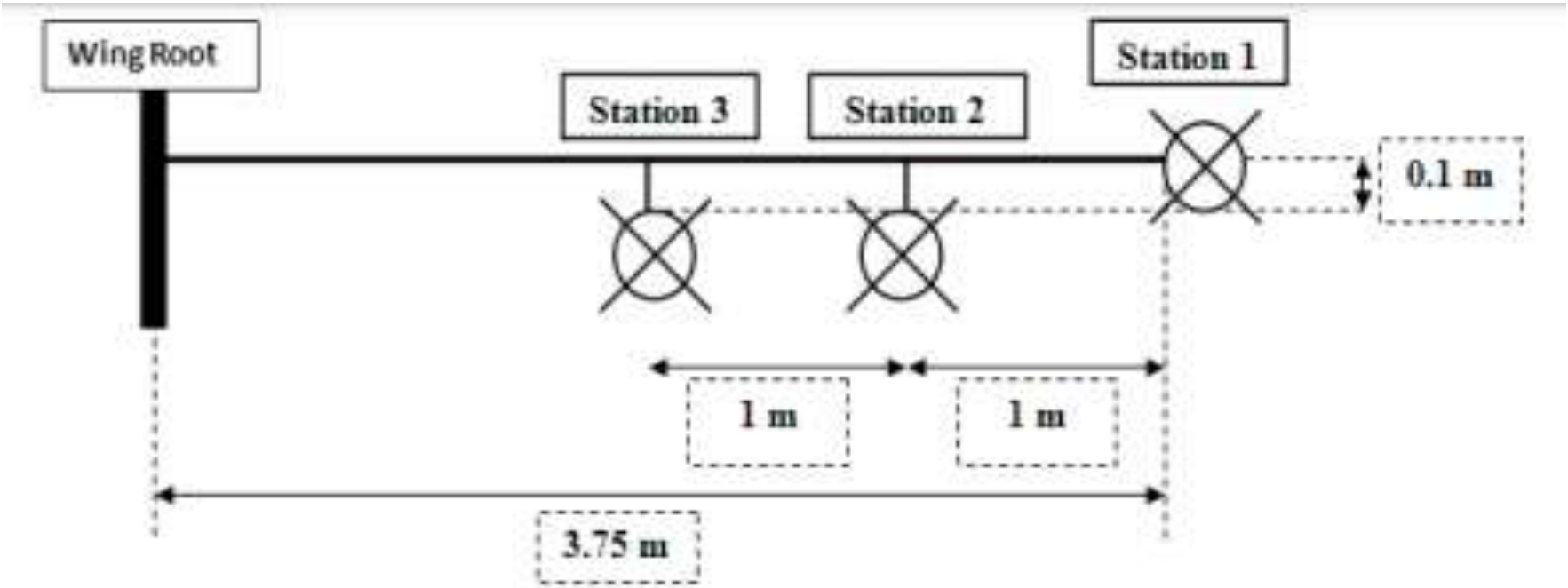

External stores configuration of the wing

Effect of aero elasticity in flight vehicle design

Station	Missile Type	Length [m]	Diameter [m]	Mass [kg]
1	AIM-9M	2.85	0.128	86.0
2	AIM-120 A	3.66	0.178	157.89
3	AIM-120 A	3.66	0.178	157.89

External stores technical data

Wing Loading

Based on, the load factor for the fighter aircraft is set atnz = 5.5.

The load for this wing, as shown in Fig. 3, is assumed to be elliptic load acting along the wing span wise (y-axis) direction and symmetric quadratic load along chord wise (x-axis) direction.

With this load assumption, the sizing of the wing box can be conducted.

Wing loading estimation equation

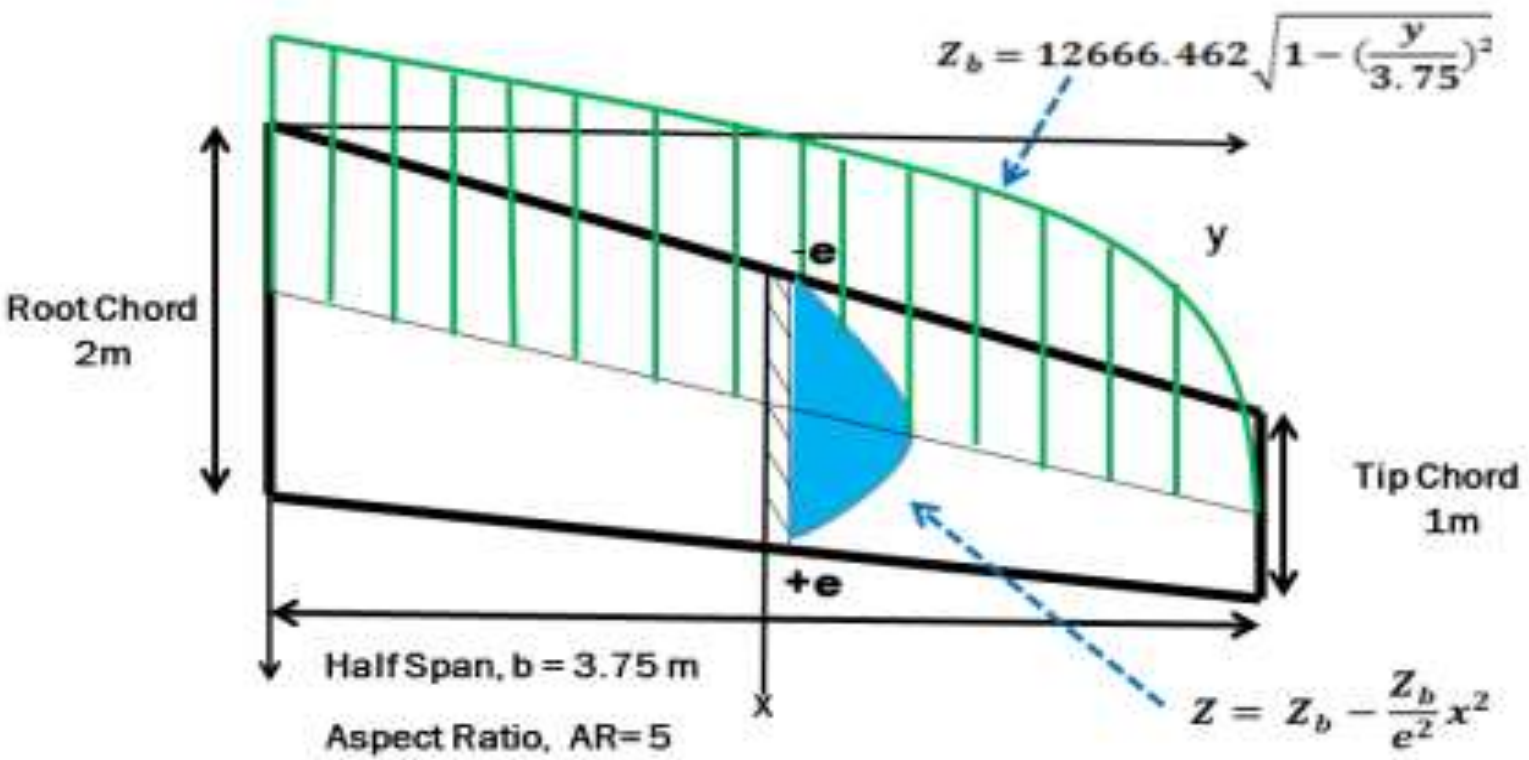

Wing loading estimation equation

The formula to calculate the load factor is given by Eq. (1) in which L is the lift and W is the weight of one side of the aircraft wing based on;

$$n_z = \frac{L}{W}$$

Here the lift can be calculated

$$L = n_z W$$

The span wise elliptic load can be formulated as:

$$\left(\frac{y}{a}\right)^2 + \left(\frac{z_b}{b}\right)^2 = 1$$

Wing loading estimation equation

Where the value of parameter a is half the span length since it is the length of the major axis, and parameter b is the minor axis.

The value of b can be calculated using (6). The chord wise quadratic load distribution is given by:

$$z = C_0 + C_1 x + C_2 x^2$$

The area of the quadratic load in chord wise direction can be calculated by integrating Eq. acting along the x axis.

$$A_{quadratic} = \int_{-e}^{e} z_b \left[1 - \left(\frac{x}{e}\right)^2\right] dx$$

Then, the volume of the elliptic load can be found by integrating Eq. (5) along the y axis in Eq

$$V = \frac{4}{3}\int_0^a z_b(y)e(y)dy$$

Wing loading estimation equation

To find the minor axis of the elliptic equation, Eq. (3), equation (2) is divided by 2 since this is only applicable for the half wing, equal to the volume found in Eq. (3).

This expression can be written as:

$$V = \frac{L}{2}$$

The wing can be assumed as a beam along y axis to find the shear force Q and moment M of each section as denoted in Eq. (8) and Eq. (9), respectively.

$$Q(y) = \int dQ$$

$$M(y) = \int dM$$

Wing Sizing

To calculate the skin thickness of the overall wing, the wing is divided into 4 regions along the span and the thickness in each region is calculated based on the maximum load in the respective region as shown in Fig. 4 and Fig. 5.

Wing Sizing

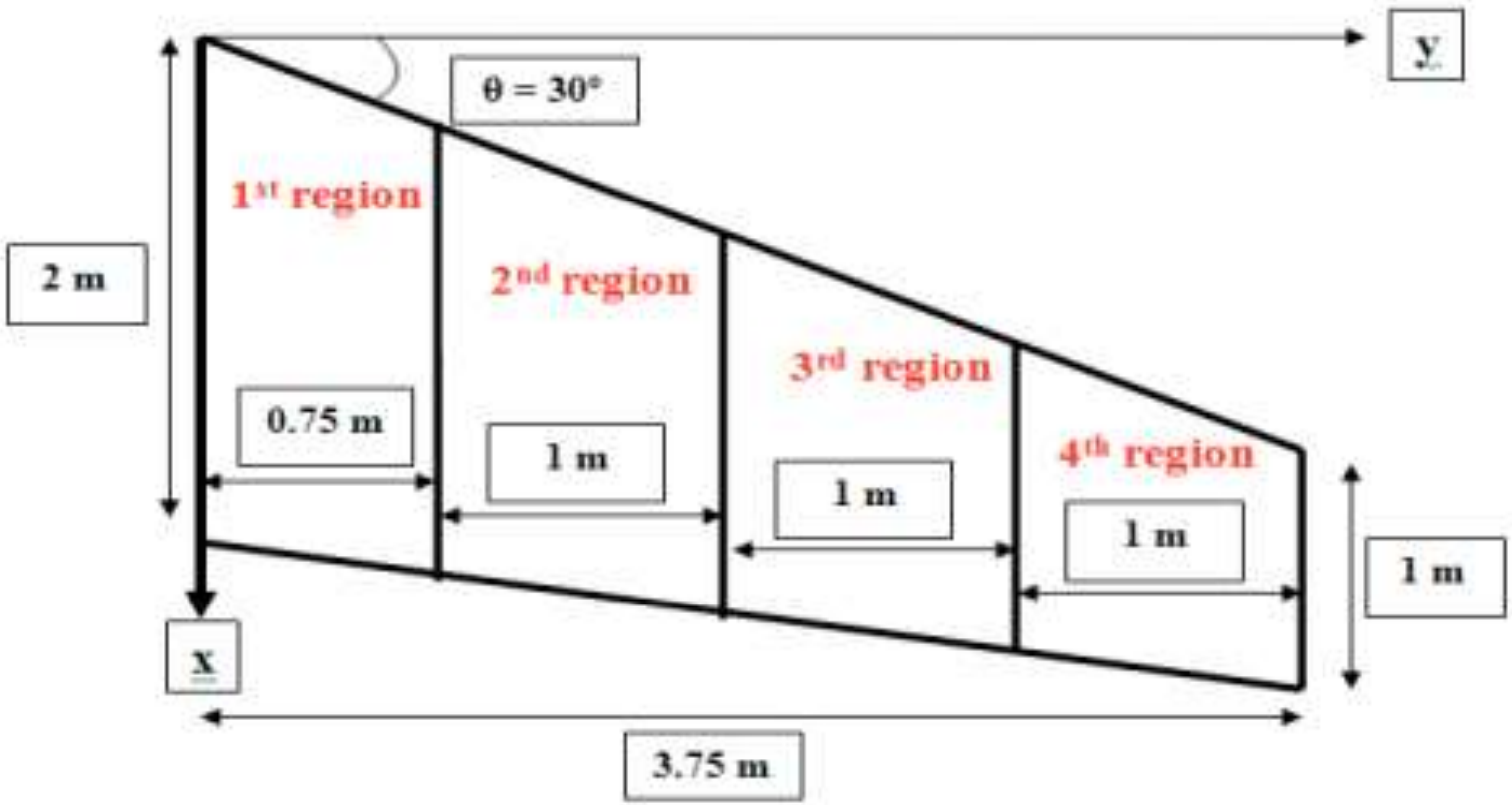

Top view of skin thickness division region

Wing Sizing

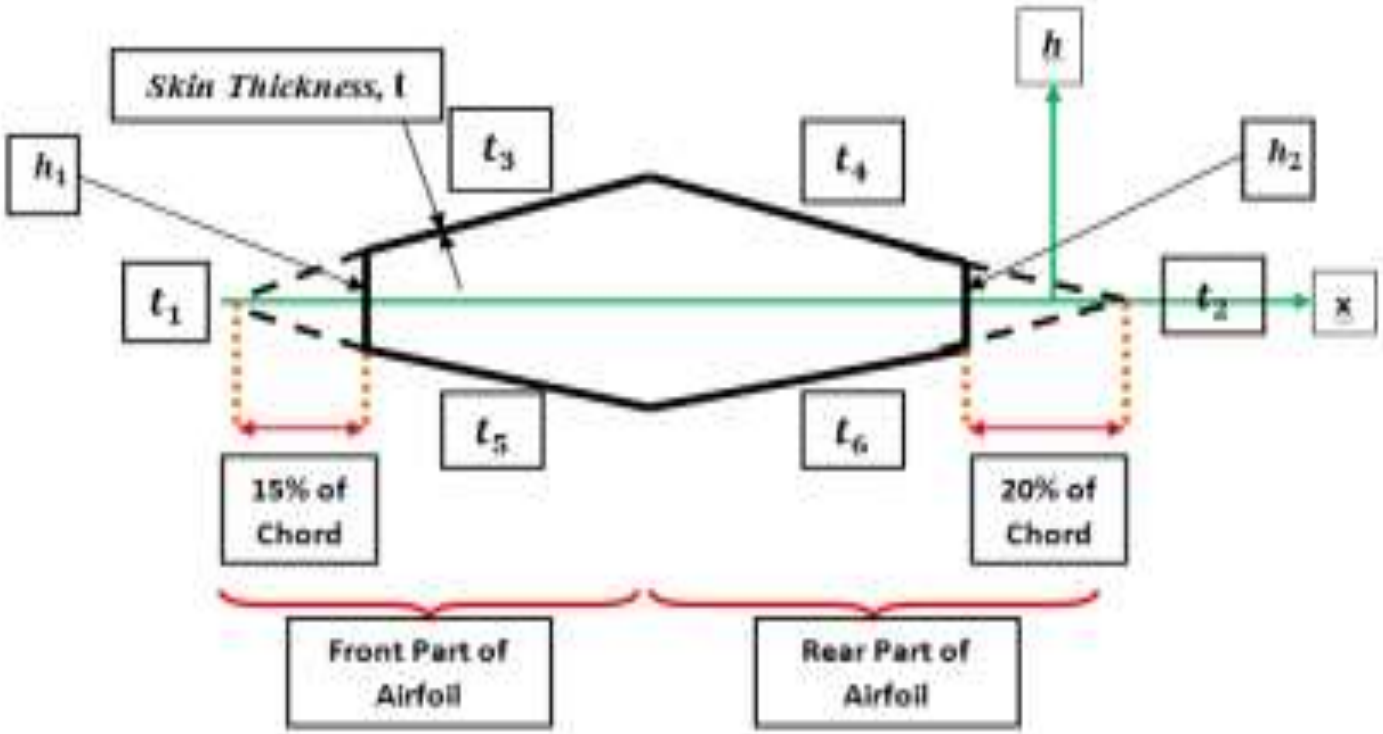

Skin thickness segment in a region

Wing Sizing

The moment of inertia formula is given as: $I = \int h^2 \, dA$

The moment of inertia for the front and rear spar are calculated as a vertical segment in $I_{xx} = \frac{1}{12} th^3$

The moment of inertia for the inclined segments which has an inclination angle of θ, can be derived using Eq. (10).

This can be done by setting the limit for integration along z axis starting from 0 to the end of each inclination segment denoted as./. The final formula is given by Eq.

$$I = \frac{t}{\cos\theta} \int_0^{b'} \left(\frac{h}{2} + x\tan\theta\right)^2 dz$$

Wing Sizing

By assuming the thickness to be constant at every skin and spar, equation reduces to form an equation to find the thickness in any region based on the associated moment Mating in that region as shown in Eq. $\sigma_y = \frac{M\, h_{middle}}{I(t)}$

Where 7 is calculated based onEq. (9), 89:;;<= is the height of the inclination for the front spar of the wing only and(is the summation moment of inertia of the wing box in terms of t as given in Eq.

i. Safety Factor:

The safety factor FS for the structural strength analysis

$$\tau_y = \frac{QS}{b\,I}$$

$$\frac{\tau_{allow}}{\tau_y} \geq F.S$$

$$\frac{\sigma_{allow}}{\sigma_y} \geq F.S$$

Wish You All the Best